DATA CENTER

Setting a New Standard for Network Efficiency with VCS Fabric Multilayer, Multipathing Capabilities

BROCADE

Modern virtualized, distributed application architectures are placing profound new demands on the data center networks that serve them. Application performance itself is now highly dependent on link utilization and finding the optimal path between servers. The efficiency and resilience of the network connecting the application components have never been more important.

IT service organizations also need the flexibility to scale out their networks on demand to respond to immediate business needs without hard-wired technical limitations. Perhaps most importantly, mission-critical networks must ensure predictable application performance at any time, regardless of traffic volume. However, overbuilding data center networks to support unusual traffic spikes is generally not economically feasible. IT departments need to find practical ways to strike a balance between resilience and flexibility on the one hand, and over-engineering on the other.

The innovative multilayer, multipathing capabilities from Brocade deliver at least twice the network efficiency of other vendors. "Efficiency" has many aspects, including enabling the shortest, most direct traffic paths; multiplying the number of available links and gateways; and reducing the operational burden–including managing unplanned downtime–through increased automation. This paper describes how Brocade is able to achieve this exceptional level of network efficiency.

INTRODUCTION

Traditionally, network designers have built out large (and expensive) aggregation and core tiers in lockstep with connectivity growth in the access tier. With innovations at Layers 1, 2, and 3, Brocade® VCS® Fabric technology addresses key challenges in scaling out data center networks—keeping capital and operating costs linear as well as improving information mobility and application performance.

Brocade VCS fabrics employ unique multipathing capabilities in both hardware and software to efficiently use the network for best performance and maximum network utilization, allowing organizations to:

- Elastically grow Layer 2 domains with optimal network utilization through efficient, dynamic load balancing at Layers 1–3
- Supply multiple active load-balanced paths and Layer 3 gateways for maximum resilience, network bandwidth, and scale
- Improve virtualized application performance through better access to network bandwidth, reduced hop count, and reduced latency

EFFICIENT MULTIPATHING AT NETWORK LAYERS 1–3

Available with Brocade Network OS 3.0 on all Brocade VDX® switches, Brocade VCS Fabric technology offers network improvements that only Brocade can supply. To deliver these benefits, Brocade fabric capabilities provide highly efficient load-balancing and multipathing innovations at Layers 1–3 of the network (see Figure 1).

- **Four or more active Layer 3 gateways with VRRP-E.** Organizations need to be able to extend their Layer 2 fabrics on demand as the need for new servers grows. The standard Virtual Router Redundancy Protocol (VRRP), and the Gateway Load Balancing Protocol (GLBP) do provide arbitrary failover between active/standby routers. However, both protocols only provide for a single active router, artificially compromising the dynamism and scale of Layer 2 domains. In contrast, Brocade VRRP-E (VRRP-Enhanced) provides support for four or more active/active Layer 3 gateways[1], yielding scalability, higher bandwidth, and easier migration within the fabric, without the need for additional hops to higher tiers. This capability is at least twice what other vendors can deliver, yielding higher scalability, higher bandwidth, and added efficiency. VRRP-E also adds shortest-path forwarding for reduced latency and a shared virtual IP gateway and virtual MAC address across the entire fabric to ease administration.
- **ECMP at Layer 2.** Beyond the immediate doubling of link utilization through the elimination of Spanning Tree Protocol, ideal fabrics find ways to assure equitable Layer 2 traffic distribution. The Brocade VCS fabric control plane improves upon the Transparent Interconnection of Lots of Links (TRILL) control plane by providing automatic assignment of RBridge IDs, automatic resolution of duplicate IDs, and automatic Inter-Switch Link (ISL) formation and topology discovery, greatly reducing set-up time when capacity is added to the network. In addition, the Brocade VCS approach to Equal-Cost Multipathing (ECMP) load-balances traffic and avoids overloading lower bandwidth interfaces. Load balancing is based on the aggregate link speed that is available to an adjacent switch, helping to maximize the utilization of available links in the network.
- **Brocade ISL Trunking at Layer 1.** Standard link aggregation groups (LAGs) enable multiple links between switches to be treated as a single connection without forming loops. Unfortunately, standard LAGs use a hash-based algorithm that does not guarantee that bandwidth will be handled evenly across links. Inspired by its Storage Area Network (SAN) fabric background, Brocade Inter-Switch Link (ISL) Trunking uses a technique that is unique in the industry, employing Frame-based ISL Trunking to ensure even link utilization. By combining multiple ISLs into a single logical trunk, Brocade ISL optimizes link usage and providing load balancing by distributing traffic across all ISLs at the frame level. Brocade ISL Trunking maintains in-order frame delivery to ensure data integrity and helps ensure reliability and availability, even if a link in the trunk fails.

1 VRRP-E has no design limit on gateways. Please reference the NOS release notes for the current number of gateways supported.

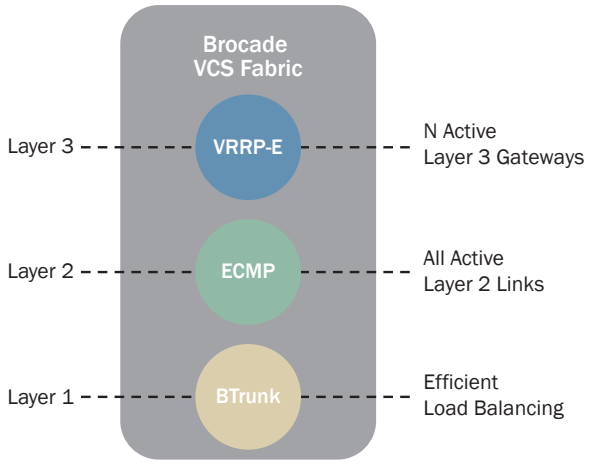

Figure 1.
Brocade VCS Fabric technology provides key innovations at Layers 1–3.

Key Brocade VCS Fabric Attributes Short-Path Forwarding

Standard VRRP provides an election protocol to provide virtual router functionality via IP multicast. Unfortunately, standard VRRP offers only a limited master/standby router arrangement that provides only active-passive redundancy and creates extra unnecessary hops for routing and forwarding (Figure 2).

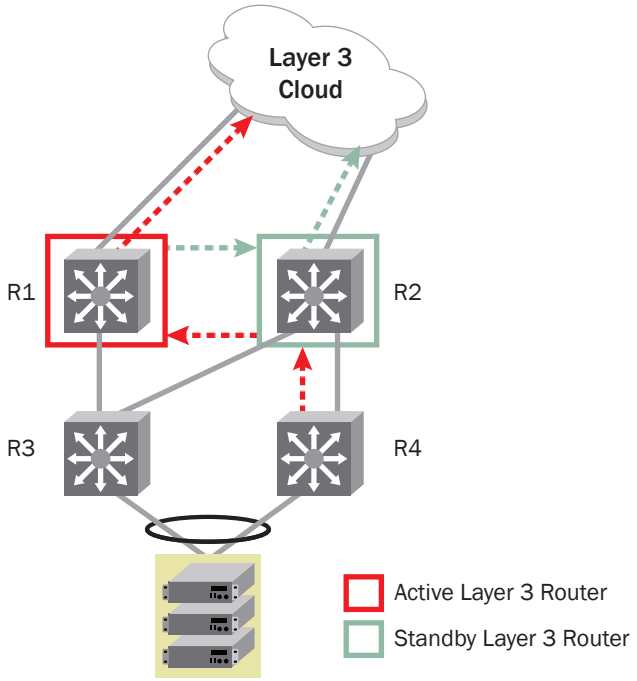

Figure 2.
Forwarding paths in traditional networks are often inefficient.

In contrast, the Brocade VRRP-E protocol provides short-path forwarding that creates an active/active gateway solution (Figure 3). When VRRP-E is deployed within VCS fabrics, four or more active gateways can be deployed in a VCS fabric. Once short-path forwarding is configured, backup routers can route frames as well, equalizing traffic load between all gateways and requiring fewer hops for lower latency. The result is better application performance.

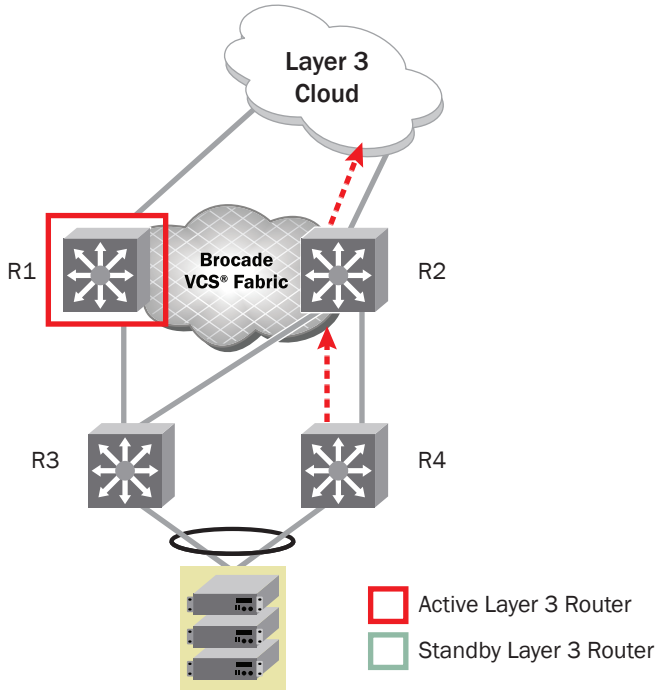

Figure 3.
In Brocade VCS fabrics, Shortest Path Forwarding combined with all-active gateways ensures low latency.

Dynamic Load Balancing at All Levels of the Network

For maximum effectiveness, dynamic load balancing must occur at all network layers. Brocade VCS Fabric technology provides distinct innovations that ensure dynamic load balancing throughout fabric as shown in Figure 4.

- Up to eight links per Brocade ISL Trunk provide efficient load balancing between switches
- Ingress RBridges on Brocade VDX switches are ECMP-based for efficient load balancing, depending on the traffic pattern
- Active/active Layer 3 forwarding is supported via four or more active gateways within the VCS fabric

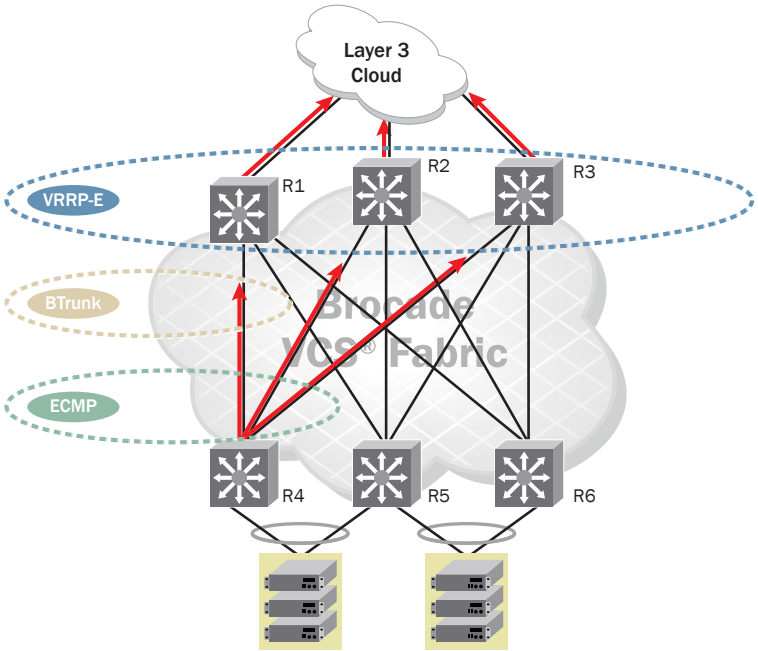

Figure 4.
Brocade VCS fabrics offer Layer 3 resiliency with multiple active gateways, maximum network utilization, and dynamic load balancing through key technologies at Layers 1–3 of the network stack.

USE CASES FOR LAYER 3 SERVICES IN BROCADE VCS FABRICS

Brocade VCS Fabrics provide advantages for a number of scenarios as described in the sections that follow.

Layer 2 Extension Through Multiple Active Gateways

Growing deployment of virtualized servers, Big Data solutions, and cloud computing are driving increased inter-VLAN routing, higher levels of east-west network traffic, and an urgent need for lower latency between the distributed components of virtualized applications. Ethernet fabrics such as VCS fabrics were developed to address these key data center challenges, both by providing operational simplicity and by extending Layer 2 domains to improve communication between VMs. However, the elastic scale of Ethernet fabrics and the applications that use them has outpaced traditional routing capabilities, constraining Layer 2 fabric growth and performance as a result. In fact, Layer 2 fabric domain size is directly proportional to the number of available Layer 3 gateways. Not only does this reality create an arbitrary limitation in terms of Layer 2 growth, it complicates deployments by requiring the creation of additional Layer 3 domains.

With Brocade VCS Fabric technology and its ability to provide four or more active-active Layer 3 gateways, additional active gateways can always be added to the fabric. The result is higher routing capacity, higher bandwidth, maximum link utilization, and the ability to elastically scale out much larger Layer 2 domains. With no need for additional hops outside the fabric for routing, east-west communication and activities such as VMware VMotion are easily enabled.

Avoiding Traffic "Tromboning"

With traditional Layer 3 routing, the active/standby router configuration can cause inefficient forwarding, particularly if traffic from one location has to be routed to another location to reach the active node. In addition, a traffic "trombone" effect can result in the case of a router failover event, as the traffic must be rerouted to reach the newly active router (Figure 5).

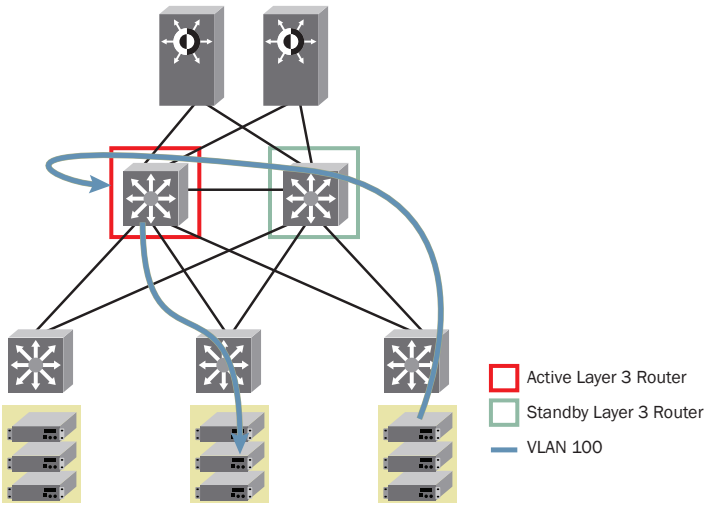

Figure 5.
Traffic tromboning in a traditional Layer 3 environment.

Brocade VCS fabrics solve these issues, since all gateways are active and forwarding at all times, resulting in fewer hops for lower latency. Traffic does not need to be routed from another geographic location, and if a gateway in one location fails, the traffic is equally load-balanced among the other remaining active gateways (Figure 6).

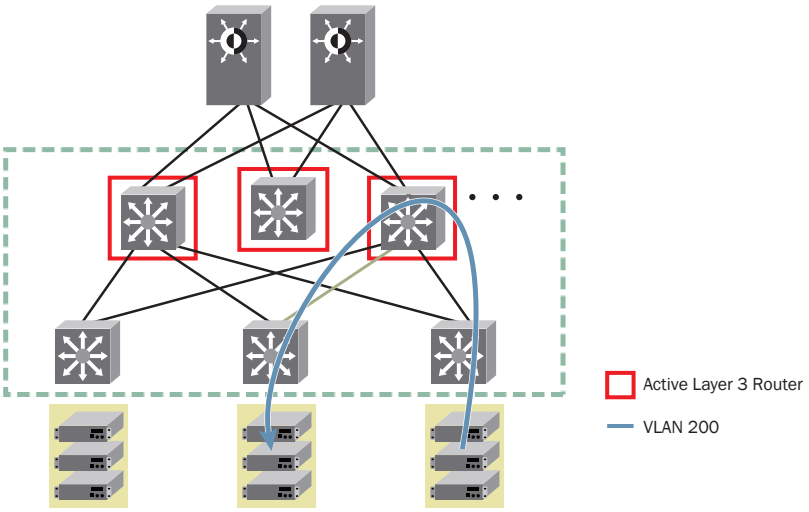

Figure 6.
Traffic efficiency is improved with Layer 3 gateways instantiated anywhere within a VCS fabric.

Accelerating Server-to-Server Traffic

Virtualized workloads drive a need for inter-VLAN routing and for VM connectivity and mobility, especially when VMs move from one physical system to another (for example, as a part of a VMotion event). Next-generation routing solutions must minimize the number of hops required for VLAN routing, and they must provide VM connectivity for VMotion events without making things more complex for administrators.

The Layer 3 services in VCS fabrics provide efficient inter-VLAN traffic optimization, since all Brocade VDX switches can handle Layer 3 traffic. Layer 3 traffic is kept as low as possible in the network topology, minimizing hops, accelerating server-to-server traffic, and increasing application performance. In addition, since the entire fabric shares the same virtual IP and MAC addresses, default gateways do not need to change when a VM moves, irrespective of the physical location of the VM within the VCS fabric. The result is vastly simplified operations and a reduced administrative burden (Figure 7).

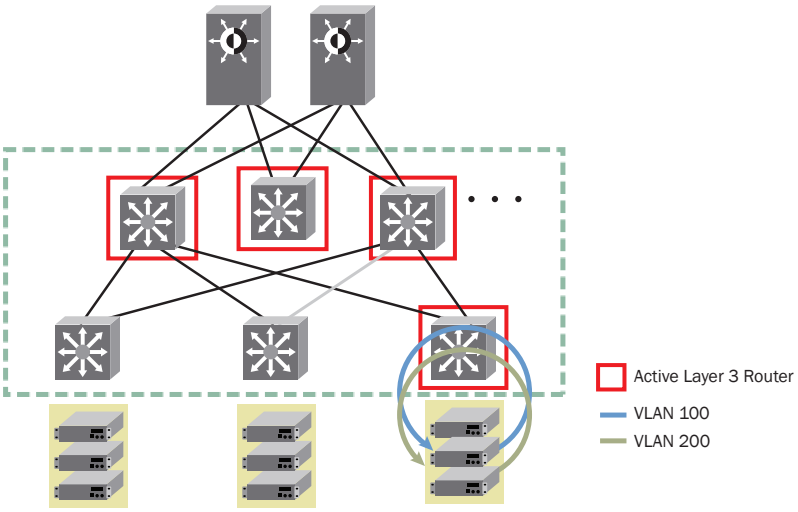

Figure 7.
Brocade VCS provides optimal forwarding for inter-VLAN routing.

CONCLUSION

Today's data centers are undergoing a profound transformation due to shifts in application architectures and rising expectations with regard to IT service delivery. The need to deploy virtualized applications and business agility in the face of ever-changing requirements is hindered by much existing network infrastructure that is largely static. Traditional, hierarchal Ethernet networks are complicated, inefficient and highly manual—which heightens the potential for conflicts and outages due to human error. In contrast, Brocade VCS Fabric technology was designed from the outset to address this paradox—delivering unprecedented simplicity and automation and offering exceptional efficiency and fault tolerance.

Brocade VCS Fabric technology applies intelligent automation to fabrics, delivering resilient fabrics with multiple active gateways, all active links, and highly efficient load balancing at each network layer. Now IT service organizations can elastically scale their VCS fabrics while being assured of the best performance, maximum network utilization, and dramatically simplified management.

Brocade VCS Fabric technology applies intelligent automation to fabrics, delivering resilient fabrics with multiple active gateways, all active links, and highly efficient load balancing at each network layer. Now IT organizations can elastically scale their VCS fabrics while being assured of the best performance, maximum network utilization, and dramatically simplified management.

ABOUT BROCADE

Brocade networking solutions help the world's leading organizations transition smoothly to a world where applications and information reside anywhere. This vision is designed to deliver key business benefits such as unmatched simplicity, non-stop networking, application optimization, and investment protection.

Innovative Ethernet and storage networking solutions for data center, campus, and service provider networks help reduce complexity and cost while enabling virtualization and cloud computing to increase business agility.

To help ensure a complete solution, Brocade partners with world-class IT companies and provides comprehensive education, support, and professional services offerings. For more information about Brocade products and solutions, visit www.brocade.com.

REFERENCES

Brocade VCS Fabric Technology

Brocade VDX 6710 Switch

Brocade VDX 6720 Switch

Brocade VDX 6730 Switch

Brocade VDX 8770 Switch

Corporate Headquarters
San Jose, CA USA
T: +1-408-333-8000
info@brocade.com

European Headquarters
Geneva, Switzerland
T: +41-22-799-56-40
emea-info@brocade.com

Asia Pacific Headquarters
Singapore
T: +65-6538-4700
apac-info@brocade.com

© 2012 Brocade Communications Systems, Inc. All Rights Reserved. 12/12 GA-WP-1708-01

ADX, Brocade, Brocade Assurance, Brocade One, the B-wing symbol, DCX, Fabric OS, ICX, MLX, MyBrocade, SAN Health, VCS, and VDX are registered trademarks, and AnyIO, HyperEdge, NET Health, OpenScript, and The Effortless Network are trademarks of Brocade Communications Systems, Inc., in the United States and/or in other countries. Other brands, products, or service names mentioned may be trademarks of their respective owners.

Notice: This document is for informational purposes only and does not set forth any warranty, expressed or implied, concerning any equipment, equipment feature, or service offered or to be offered by Brocade. Brocade reserves the right to make changes to this document at any time, without notice, and assumes no responsibility for its use. This informational document describes features that may not be currently available. Contact a Brocade sales office for information on feature and product availability. Export of technical data contained in this document may require an export license from the United States government.

BROCADE