WHITE PAPER

DATA CENTER

Virtual Fabrics Provide Administrative Flexibility in a Shared Storage Environment

Brocade continues to add ANSI-standard features to its products, while maintaining a customer focus with ease of use and simple management.

BROCADE

Brocade® customers have the widest selection of standard features to consider when designing their shared storage infrastructure. Backward compatibility, non-disruptive firmware upgrades and intuitive management tools are important reasons why Brocade connects to 80 percent of data center storage worldwide

With Virtual Fabrics customers can partition a physical switch into multiple Logical Switches. Each Logical Switch belongs to a Logical Fabric, which has independent data paths, fabric configuration (zoning, Quality of Service (QoS), fabric mode, and so on) and management. With or without Virtual Fabrics, customers benefit from advanced Fabric OS® (FOS) features, designed to deliver scalability, performance, and High Availability (HA), with simple management.

INTRODUCTION

With the release of Brocade Fabric OS (FOS) 6.2, customers have a new option, an ANSI standard-based implementation of Virtual Fabrics. The Virtual Fabrics feature adds two new capabilities—Logical Switches and Logical Fabrics—both available in base FOS firmware.

As shown in Figure 1, physical switches can be partitioned into independently managed Logical Switches, each with their own data, control, and management paths. A Logical Switch can be configured in any mode, including McDATA Fabric or McDATA Open Fabric mode. Logical Switches can be used to:

- Allocate fabric resources per port rather than per switch
- Simplify chargeback for storage by customer, department, application, or storage tier
- Consolidate resources across multiple fabrics

Since Logical Switches do not need to be enabled on every switch in a Storage Area Network (SAN), deployment is simple and non-disruptive in existing environments.

Each Logical Switch belongs to one Logical Fabric, as shown in Figure 1. A Logical Fabric includes all Logical Switches assigned to it and can also include physical switches that do not support Virtual Fabrics. Each Logical Fabric can support FOS Native, McDATA Fabric, or McDATA Open mode. A special Inter-Switch Link (ISL) connection, called an "XISL," can carry traffic for multiple Logical Fabrics on the same physical link and maintain fabric isolation. Or traditional ISL connections between Logical Switches can be used, in which case the ISL carries traffic for a single fabric.

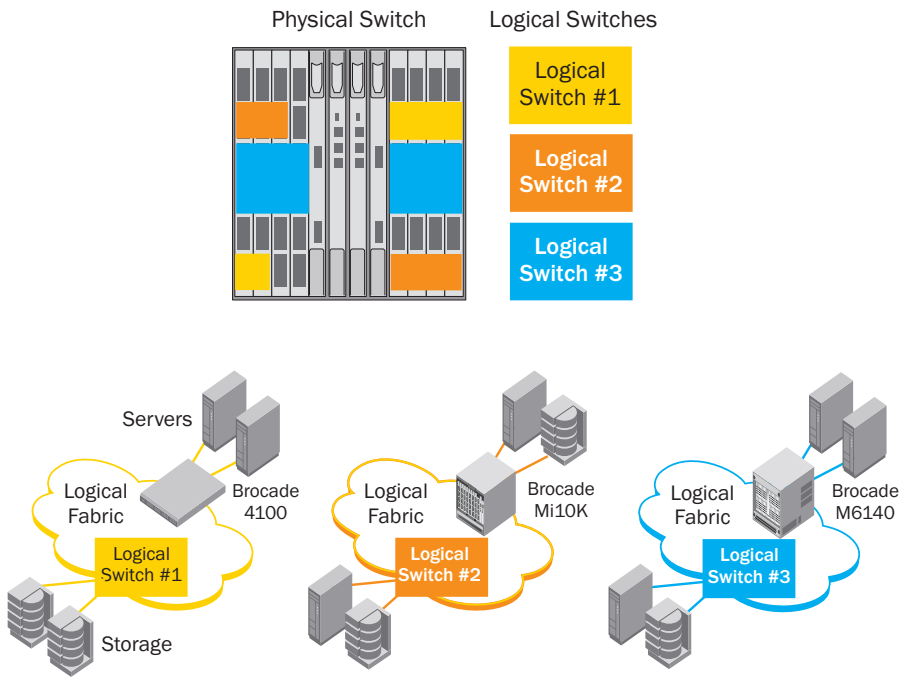

Figure 1.
Logical Switches and Logical Fabrics.

Both ISL and XISL connections can use front ports and Inter-Chassis Links (ICLs) and support frame trunking and Dynamic Path Selection (DPS) for full bandwidth utilization. The Logical Fabric capability also supports Integrated Routing (IR) at Layer 3. In this case, a Logical Switch in one or more physical switches can be created and assigned to the backbone fabric. The backbone fabric connects to independent edge fabrics; zoning allows traffic to flow between selected devices in any edge fabric. With Virtual Fabrics, only those ports assigned to the Logical Switch acting as the backbone switch are in the backbone fabric. Other ports in the chassis can be assigned to any other Logical Switch and are not in the backbone fabric.

The Virtual Fabrics feature is available on 8 Gbit/sec platforms that are VF-capable, including:

- Brocade DCX® Backbone
- Brocade DCX-4S Backbone
- Brocade 5300 Switch
- Brocade 5100 Switch.

For investment protection, products that are not VF-capable—such as the Brocade 48000 Director, earlier 2 Gbit/sec and 4 Gbit/sec FOS and M-Series platforms running M-Enterprise OS (M-EOS) software—can seamlessly connect to Logical Switches in VF-capable products without any reconfiguration.

To simplify management, customers use the newest management platform, Brocade Data Center Fabric Manager (DCFM®). Once created, Logical Switches and Logical Fabrics are managed in exactly the same way as their physical counterparts. Standard FOS Command-Line Interface (CLI) commands can be used to perform configuration and management functions for Virtual Fabrics or to script them.

VIRTUAL FABRICS AND FOS CAPABILITIES

Virtual Fabrics is an option that can be added to the existing foundation of FOS capabilities: it does not replace them. All Brocade SANs deliver the following capabilities with or without Virtual Fabrics.

- Non-disruptive fabric builds. Addition or removal of switches and ISLs do not disrupt data flows elsewhere in a fabric.
- Registered State Change Notification (RSCN) isolation. Changes in the state of the fabric or end devices do not create broadcast storms. Notification of state changes is limited to those zones with a "need to know."
- Zoning. Application traffic can be securely restricted to only those devices required to connect.
- Advanced Zoning. Fabric services such as encryption, traffic isolation, Quality of Service (QoS), and Fiber Channel (FC) routing can be simply and quickly configured as properties of a zone.
- Rapid fabric convergence. Routing table updates are optimized allowing, for example, 6,000 port fabrics with up to 55 switches to converge in seconds not minutes.
- True frame trunking. 8 Gbit/sec trunks can deliver up to 64 Gbit/sec of fully utilized capacity with no single point of failure.
- Distributed Name Server database. Every switch contains a full fabric routing database providing extreme availability with no single point of failure.
- Single firmware code base. All FOS products use a single code base, proven in the most demanding environments, providing investment protection with extensibility and consistent management across the product line.
- Multi-protocol support. FOS supports FC Protocol (FCP), FICON, FC over IP (FCIP), IP over FC (IPFC), FC Routing, and iSCSI.
- Non-disruptive native connectivity. Devices running FOS and M-EOS can be used in the same fabric providing investment protection and non-disruptive migration to FOS fabrics.

Virtual Fabrics enables you to create multiple logical instances of Fibre Channel switches and fabrics with independent control paths and instances of the Fabric Protocol, Name Server, Zoning, Fabric Shortest Path First (FSPF) routing protocol, and so on. Brocade DCFM uses a secure, Role-Based Access Control (RBAC) model to simplify assigning privileges to administrators: an administrator can have different levels of permissions per Logical Switch or Logical Fabric.

LOGICAL SWITCHES

A Logical Switch is the fundamental component of a Virtual Fabric. When enabled on a VF-capable switch, Virtual Fabrics allows users to divide the switch into multiple Logical Switches. Ports in the physical switch can be dynamically allocated to any Logical Switch in the chassis and can be reallocated to Logical Switches as needed. Port, switch, and fabric management are performed in the same way as for physical switches or fabrics.

As shown in Figure 2, Virtual Fabrics includes a system-defined Default Logical Switch, and multiple user-defined Logical Switches.

Default Logical Switch

The Default Logical Switch (Default Switch) is automatically created when Virtual Fabrics is enabled on a VF-capable switch. Initially, the Default Switch contains all the physical switch resources and ports. For backbone-class switches, the ports on any blade inserted into the chassis initially belong to the Default Switch. Ports required by user defined Logical Switches are dynamically allocated from the Default Switch by the chassis administrator. As long as the Virtual Fabrics feature is enabled, there is a Default Switch, even when all ports in the Default Switch have been allocated to other Logical Switches. The Default Switch supports all the same port types as the physical switch.

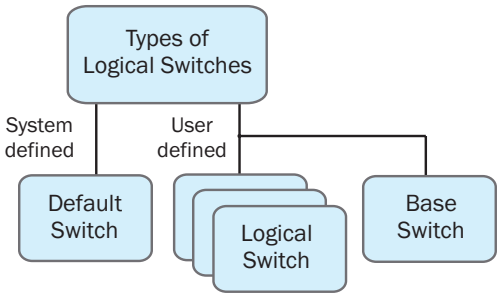

Figure 2.
Types of Logical Switches.

Logical Switch

The user creates a Logical Switch, assigning it a unique Fabric ID (FID) that identifies the Logical Fabric to which the Logical Switch belongs. If a Logical Switch needs more ports, they can easily be assigned from the Default Switch or from any other Logical Switch. A Logical Switch supports F_Ports, E_Ports, and VE_Ports.

Base Logical Switch

The Base Logical Switch (Base Switch) is an optional user-defined Logical Switch. Each physical switch can have no more than one Base Switch. The Base Switch provides a common communication infrastructure, which can be shared by all Logical Switches in the physical switch. Multiple Base Switches can be connected at Layer 2 using front-port and/or ICL connections—creating a Base Logical Fabric (Base Fabric). The physical connection between Base Switches is called an eXtended ISL (XISL). XISL connections carry traffic for multiple Logical Fabrics while maintaining traffic isolation for each Logical Fabric over the shared XISL connection.

Base Switches can also be used to create a backbone fabric at Layer 3, which can connect to edge fabrics via Inter-Fabric Link (IFL) connections (EX_Port, VEX_Port). IFL connections attach to either Logical Switches or physical switches in the edge fabrics. Zoning uses Logical SAN (LSAN) zones to route traffic between specific devices in edge fabrics. VF-capable switches supporting Integrated Routing can create EX_Ports in the Base Switch on demand and require no special cards. Gigabit Ethernet (GbE) ports in the Brocade FR4-18i Extension Blade can be allocated to a Base Switch and configured as VEX_Ports for routing over Wide Area Network (WAN) links. A Base Switch supports E_Ports, EX_Ports and VEX_Ports.

Logical Fabrics

The Fabric ID (FID) assigned to a Logical Switch identifies its traffic as belonging to a specific Logical Fabric. Logical Switches in other chassis with the same FID can join into a Logical Fabric. Logical Switches within a Logical Fabric can be directly connected with ISLs (front ports and/or ICL connections), supporting frame trunking and DPS. As is the case in a physical fabric, the ISL connection carries traffic for a single fabric. An alternative to dedicated ISL connections at Layer 2 uses the Base Fabric to carry traffic for multiple Logical Fabrics on the same physical connection, maintaining fabric isolation.

XISL/LISL

When a Base Switch is connected to another Base Switch, an XISL connection is created, as shown by the large pipe in Figure 3. When Logical Switches with the same FID are configured to use the XISL (such as the Logical Switches #1 and #2), the Base Switches automatically create a Logical ISL (LISL) within the XISL. The LISL isolates traffic from multiple fabrics: each LISL is dedicated to traffic for a single fabric. Think of it this way: the physical XISL connection between two Base Switches automatically forms a LISL "tunnel" dedicated to the traffic to and from Logical Switches, as shown by the dashed lines inside the XISL.

Figure 3.
Logical Fabric with XISL and Logical ISL.

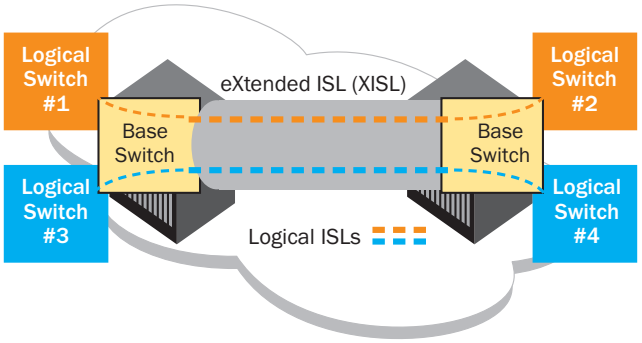

BENEFITS

Virtual Fabrics does not have to be enabled on all switches in the SAN. Adding a new VF-capable switch to an existing environment is non-disruptive: Logical Switches can connect to existing fabrics running in any mode. With Brocade DCFM, a few mouse clicks on a single Virtual Fabric management panel creates a Logical Switch and assigns it to a Logical Fabric. Other key benefits are highlighted in this section.

Per-port Resource Allocation

In large environments with multiple fabrics, unused ports in one fabric cannot be used by any other fabric. With Virtual Fabrics, unused ports can be moved dynamically and non-disruptively to any Logical Fabric. Redeploying unused ports increases utilization of switch ports and reduces power and cooling costs, since fewer chassis are required to scale multiple fabrics.

Improved ISL Bandwidth Utilization

The Base Switch aggregates traffic from Logical Switches in the physical switch in a common Base Fabric. The Base Fabric maintains isolation for all Logical Fabric traffic flowing through it. Adding ports to a Base Switch increases XISL bandwidth. With frame trunking and DPS, XISL bandwidth is utilized efficiently, minimizing the number of physical connections needed. Finally, since an XISL supports FC Shortest Path First (FSPF) protocol, a single link failure in the trunk means traffic is automatically routed to the remaining links maintaining High Availability.

Flexible Management Partitioning

Virtual Fabrics allows management to be partitioned to match different management models—department, Service Level Agreement (SLA), FICON, Open Systems or application-tier. Brocade DCFM allows administrators to assign RBAC to all management functions. A single user can have different permissions for the Logical Switch, Logical Fabric, or physical chassis. All fabric services, such as Zoning, QoS, and FC Routing, are managed separately in each Logical Fabric.

Backward Compatibility

Switches that are not VF-capable can connect to any Logical Switch in a single Logical Fabric. This includes 2 and 4 Gbit/sec B-Series platforms and all M-EOS switches running in either McDATA Fabric or McDATA Open mode. Simply adding one or more VF-capable switches to an existing environment brings all the benefits of Virtual Fabrics and does not require replacing or reconfiguring existing switches.

Full Scalability

Customers expect “no compromise” scalability with Brocade’s end-to-end 8 Gbit/sec Data Center Fabric infrastructure. When enabled, the Virtual Fabrics feature maintains Layer 2 or Layer 3 SAN scalability.

SUMMARY

Virtual Fabrics is an optional feature customers can use when they need port-level partitioning of physical switches into independently managed Logical Switches. Or they might want to use Logical Fabrics for improved traffic, management, and fault isolation in large environments. Once they are created, Logical Switches and Logical Fabrics are managed in the same way as physical switches and fabrics. With Brocade DCFM, it is easy to define and configure Virtual Fabrics. Virtual Fabrics does not reduce fabric or chassis scalability, keeping Return on Investment (ROI) high. Advanced FOS features including but not limited to frame trunking, DPS, FC Routing, Adaptive Networking, Top Talkers, Access Gateway, Access Gateway trunking, and FCIP for extension are all supported seamlessly.

To learn more, visit www.brocade.com.

Corporate Headquarters
San Jose, CA USA
T: +1-408-333-8000
info@brocade.com

European Headquarters
Geneva, Switzerland
T: +41-22-799-56-40
emea-info@brocade.com

Asia Pacific Headquarters
Singapore
T: +65-6538-4700
apac-info@brocade.com

© 2008 Brocade Communications Systems, Inc. All Rights Reserved. 01/09 GA-WP-1294-00

Brocade, the B-wing symbol, DCX, Fabric OS, File Lifecycle Manager, MyView, and StorageX are registered trademarks, and DCFM and SAN Health are trademarks of Brocade Communications Systems, Inc., in the United States and/or in other countries. All other brands, products, or service names are or may be trademarks or service marks of, and are used to identify, products or services of their respective owners.

Notice: This document is for informational purposes only and does not set forth any warranty, expressed or implied, concerning any equipment, equipment feature, or service offered or to be offered by Brocade. Brocade reserves the right to make changes to this document at any time, without notice, and assumes no responsibility for its use. This informational document describes features that may not be currently available. Contact a Brocade sales office for information on feature and product availability. Export of technical data contained in this document may require an export license from the United States government.

BROCADE