IP NETWORK

Building Tomorrow's Data Center Network—Today

Brocade offers data center network solutions that provide open choice and high efficiency at a low total cost of ownership, bridging current technology with the technology of tomorrow. The Brocade MLX state-of-the-art, fifth-generation, network-processor-based architecture enables you to simplify network design and implement and operate a data center network that supports business demands for flexibility, scalability, and agility.

BROCADE

INTRODUCTION

Organizations today face ever-increasing requirements for uptime, application flexibility in rapid application provisioning—and later decommissioning/redeployment of resources--and data mobility while data growth and network traffic increase at an exponential rate. The most significant technologies developed to meet these changing business requirements are server virtualization, unified communication, cloud computing, and network convergence. At the same time, network awareness for End-to-End (E2E) data center solutions must be both manageable and provide the foundation for an increasingly agile business application infrastructure.

Business agility demands increased network I/O, uptime, which in turn means constantly improving network resiliency, driving toward near-zero downtime and sub-second failover and convergence time. The network becomes more complex, for example, needing awareness of Virtual Machine (VM) mobility, application prioritization, and Quality of Service (QoS) to meet application Service-Level Agreements (SLAs).

What other factors are driving decisions about network management in the data center? Doing more with less is a constant, as is the focus on minimizing environmental impact, which drives green design solutions to reduce overall energy consumption related to power and cooling.

The Brocade® One™ network architecture, described below, addresses the many and diverse challenges for data center networks.

BROCADE ONE SOLUTION

The Brocade One architecture framework, shown at a high level in Figure 1, provides convergence-ready fabrics with an emphasis on plug-and-play Virtual Machine awareness, intelligent, scalable Layer 2 architecture for increased application mobility, and E2E management for network, compute, and storage. Guiding design principles include no oversubscription, ongoing investment protection with built-in scalability for maximum resiliency and application uptime, while decreasing power consumption.

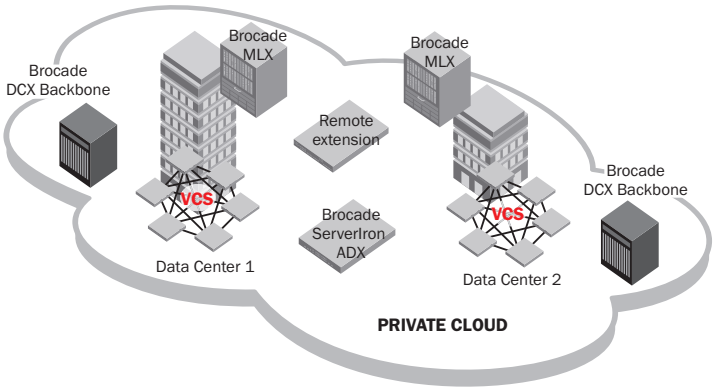

Figure 1. Brocade One data center components.

THE BROCADE MLX

The Brocade MLX Series delivers industry-leading scalability with up to:

- 15.36 Terabits per second (Tbps) system capacity
- 4.8 Billion packets per second (Bpps) throughput on
- 256 wire-speed 10 Gigabit Ethernet (GbE) ports
- 32 wire-speed 100 GbE ports
- 1,536 wire-speed 1 GbE ports

This multi-terabit performance (available in a single footprint) provides convergence-ready networks, including advanced network services, without a negative impact on performance. The future-proof Brocade MLX architecture with 10 GbE network scaling to 100 GbE, addresses continuous operation, infrastructure simplicity, and scalability in the virtualized data center deploying the Brocade One solution framework.

MULTI-CHASSIS TRUNKING

Brocade MLX Series delivers Multi-Chassis Trunking (MCT), which is an enhancements to Link Aggregation Groups (LAGs)—IEEE 802.3ad (802/1ax)–providing nodal redundancy and physical and modular redundancy with sub-second recovery in case of a failed link in the group. Based on the concept of MCT peers, two Brocade MLX Series switches act as one logical switch with access switches or servers (called "MCT clients") connected via LAGs divided across the MCT pair. With the MCT pair appearing as a single logical switch, as shown in Figure 2, a loop-free topology is achieved; in which all links are active/active with sub-second recovery, eliminating the need for spanning tree protocols.

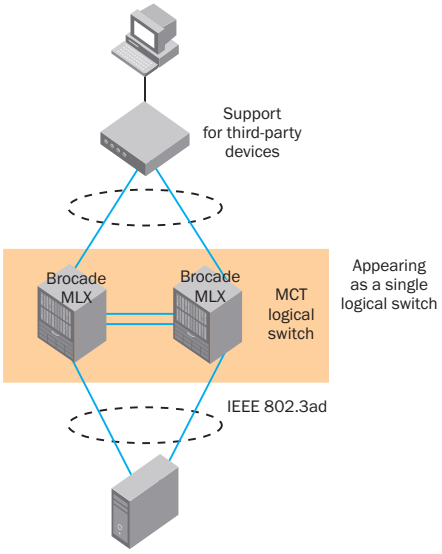

Figure 2.
Multi-Chassis Trunking (MCT).

Since the MCT protocol is based on standard LAG, the edge node (access switch or server) is transparent to the MCT protocol, which supports any third party vendor device that supports LAG. By deploying the Brocade MLX Series with MCT, network simplicity and higher resiliency is achieved together with full use of all network links.

SOLUTION EXAMPLES

The Brocade One architecture enables you to scale out a 10 GbE fabric and an efficient and collapsed 1 GbE architecture based on a range of options to meet your current and future needs. In the following section, the advantages of each deployment are explained in greater detail.

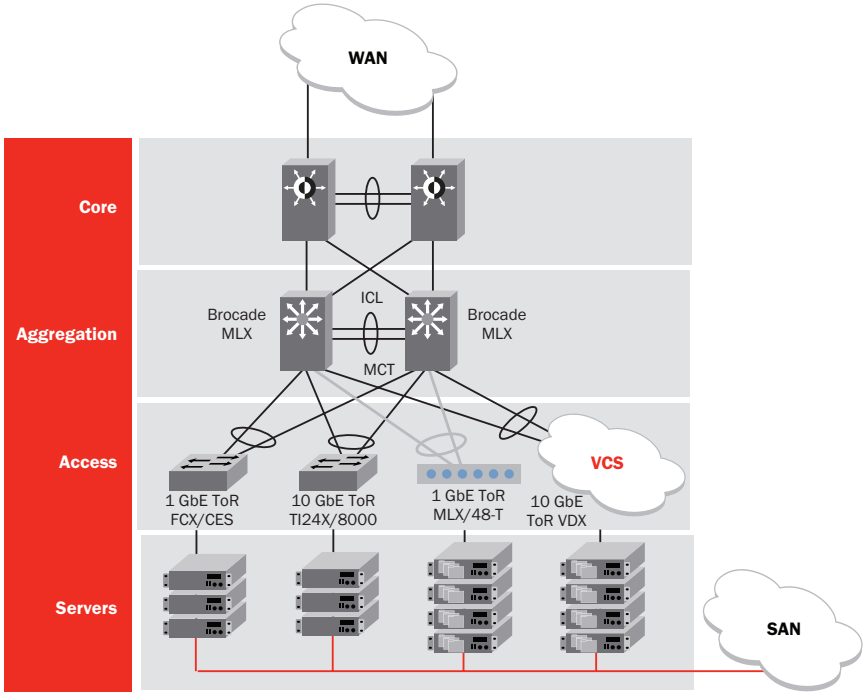

Figure 3.
Data center network design portfolio.

Simplified, Scalable, and Resilient 10 GbE Fabric Architecture

With the data center computing model increasingly virtualized with consolidation of VMs on hypervisors, hypervisor "engines" require increased network access bandwidth and resiliency to meet the application SLAs. In addition, they need CPU, memory, and disk capacity. To take full advantage of a virtualized server infrastructure the network must facilitate VM mobility from one physical server to another, handled by the hypervisor without compromising resiliency, simplicity, and scalability.

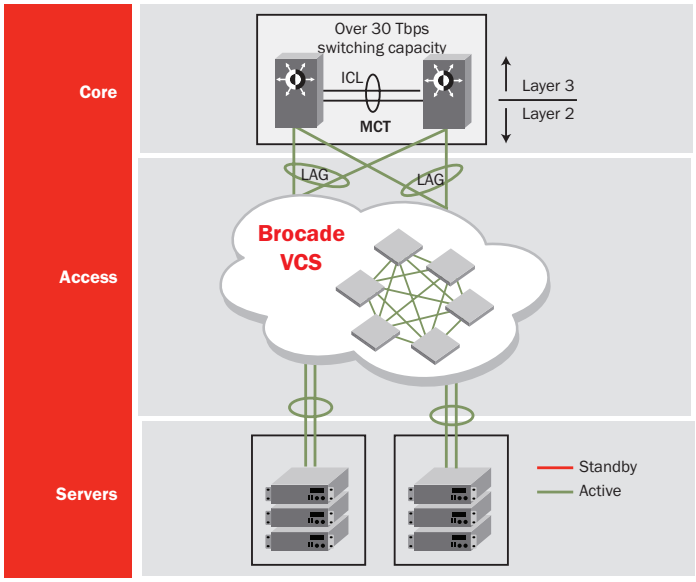

Figure 4.
Data center network design based on the Brocade MLX Series and Virtual Cluster Switching.

With servers connected to the Virtual Cluster Switching (VCS) 10 GbE fabric, a large-scale multipath Layer 2 domain is formed and VM-aware architecture is achieved. All links are fully utilized within the VCS fabric and core achieving high performance, a simplified and resilient network, and enhanced application mobility.

The fabric network architecture includes:

- Sub-200 millisecond link and node failover
- A network that is easy to manage and configure, no xSTP configuration
- Plug-and-play network scalability and deployment
- Greater than 30 Tbps switching capacity in the core

The architecture is future proof and convergence ready for Data Center Bridging (DCB)/Fibre Channel over Ethernet (FCoE) deployment and can be scaled for future growth, providing optimal investment protection and network flexibility.

Efficient and Collapsed 1 GbE vToR Architecture

Building out servers with 1 GbE connectivity on a massive scale combined with server virtualization and often rapid deployment can be extremely challenging for IT personnel. The Brocade virtual Top of Rack (vToR) solution is based on the Brocade MLX Series and the 48-T module, which ensures a simple and resilient architecture. Each 48-T module supports 8 x MRJ-21 connectors (consolidates 6 x RJ45 connectors for each MRJ-21) equivalent to 48 access ports (10/100/1000) per Brocade MLX module. Passive patch panels (meaning no power consumption) are placed in the top of each rack where the MRJ-21 cables connect and the servers are then cabled to the patch panels.

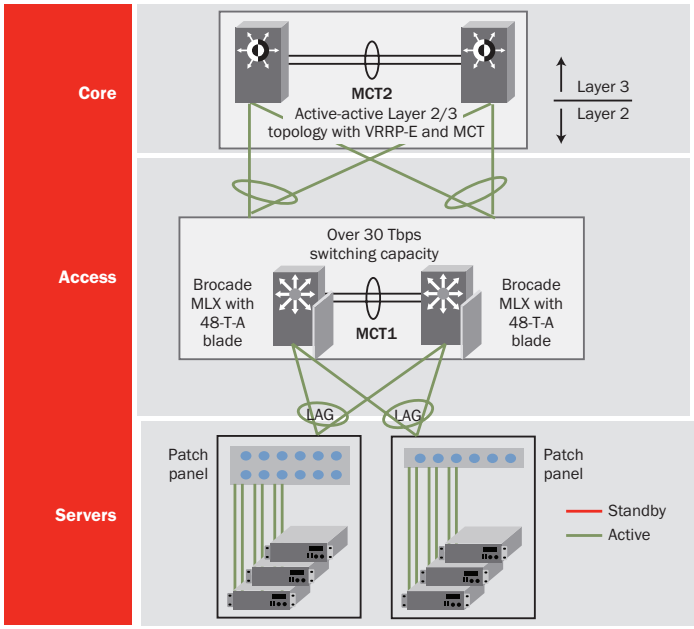

Figure 5.
Data center network design based on the Brocade MLX Series and 48-T-A blade.

This data center design with vTOR has fewer components to manage, increased reliability, and simplified cabling. In addition, ease of maintenance, hitless software upgrade, and hitless failover ensures continuous network operation. Scaling to more than 1,500 connections per Brocade MLX-32 chassis, supporting 2 million MAC addresses enables very large VM environments from the same footprint. This simple deterministic network design, with all links forwarding traffic and sub-200 millisecond link and node failover based on MCT capabilities enables simplified VM communications. The Active-Active L2/L3 topology--utilizing VRRP-E and MCT from server to core--is easy to manage and configure and supports plug-and-play scalability

Extending ToR Stack Resiliency to the Data Center Core

ToR solutions, such as deploying the Brocade FCX with stacking capabilities, provide several benefits. In this modular design for the data center network, oversubscription (due to fan-in ratios) is handled at the rack level, meaning fewer fiber cables and reduced cabling from access to aggregation/core. In addition, Brocade FCX stacking delivers single management of the stack and server-to-server connectivity without traffic traversing the aggregation/core. The FCX can be horizontally stacked across eight racks or vertically within the rack. The hitless failover within the stack ensures maximum application availability.

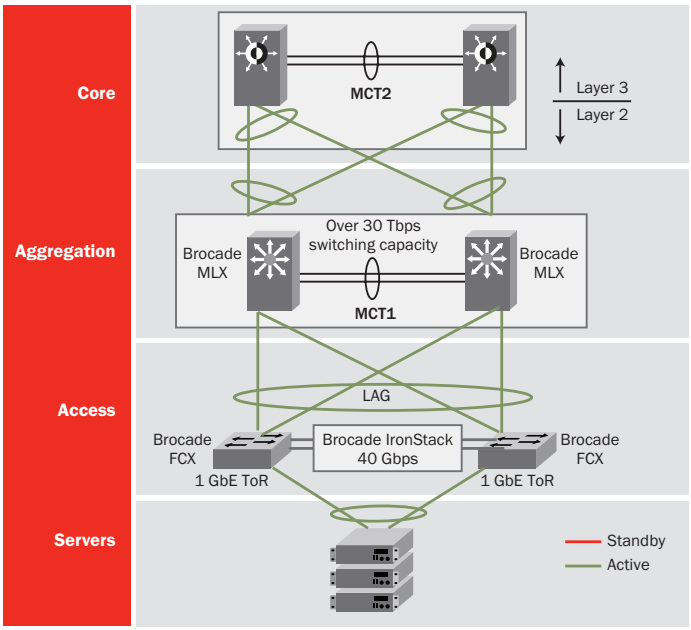

Figure 6.
Data center network design based on the Brocade MLX Series and Brocade FCX stack.

This is an optimal network design with uplink stacking cables connected to the Brocade MLX Series devices, all links fully utilized forwarding traffic, and sub-200 millisecond link or node failover. And the same level of network flexibility and resiliency can be extended to third-party devices that support link aggregation or Ether channel.

High-Performance 10 GbE Server I/O Consolidation Architecture

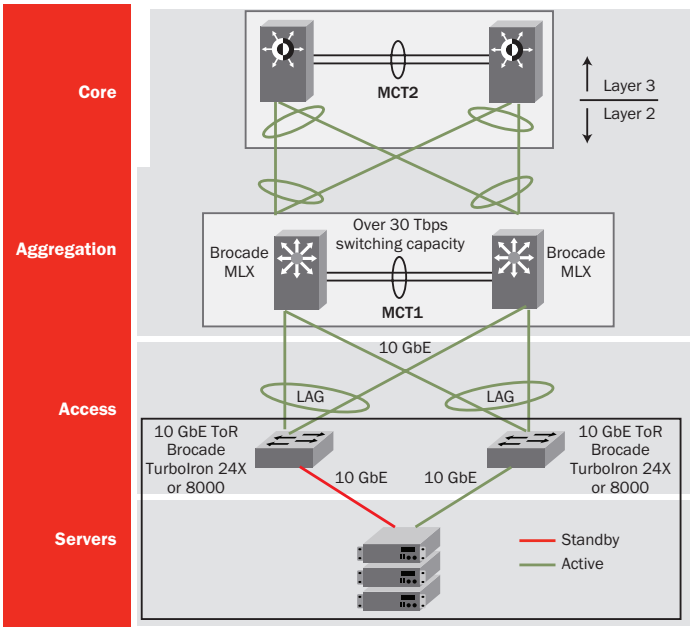

Figure 7.
Data center network design with the Brocade MLX Series, TurboIron 24X, and Brocade 8000.

Virtualization is driving server I/O consolidation, which is in turn driven by increased pressure on server I/O channels, cable clutter, and the need to reduce the physical footprint to reduce energy consumption. Consolidating server I/O over a common transport layer helps organizations reduce their initial cost of acquisition (CapEx) by reducing the amount of server adapters, cabling, and switch ports needed for building data centers. These organizations will also be able to realize operating cost (OpEx) savings due to reduced power consumption and cooling. In addition, organizations will realize significant savings because of simplified configurations, reduced potential for human error, and more efficient troubleshooting and problem resolution. The Brocade MLX Series 10 GbE wire-speed performance and high availability capabilities enable the highest performance in a resilient network. And with selection of the Brocade TurboIron 24X or Brocade 8000 for 10 GbE ToR server connectivity, this architecture delivers no xSTP from access to core with greater than 30 Tbps switching capacity in aggregation/core, non-blocking 10 GbE, and sub-200 milliseconds link and node failover from access to core. This architecture is ready for I/O consolidation of iSCSI devices with the Brocade TurboIron 24X or 10 GbE Data Center Bridging (DCB) for iSCSI/FC/FCoE with the Brocade 8000.

UNIFIED NETWORK MANAGEMENT

Network management today is characterized by discrete tools and disparate lifecycle management processes across wired, MPLS, IP, and SAN networks in the data center. Brocade Network Advisor offers network management via a single pane of glass for the Brocade One architecture. It provides unmatched simplicity with unified management across wired and wireless IP, SAN, and converged network. Standardizing the user experience in managing different types of networks means minimal re-learning when administrators manage more than one type of network or move from one to the other. An open architecture with industry-standard APIs (SMI-S, Web Services, NETCONF, and SNMP) provides flexibility and investment protection

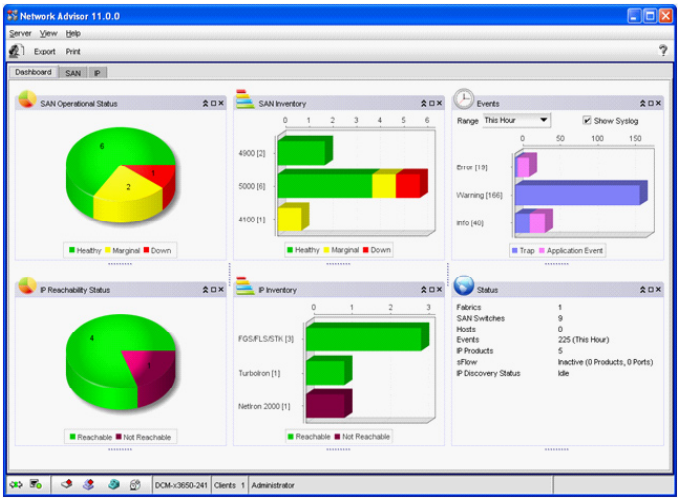

Figure 8.
Unified network management with Brocade Network Advisor.

ABOUT BROCADE

Brocade provides innovative, end-to-end network solutions that help the world's leading organizations transition smoothly to a virtualized world where applications and information can reside anywhere. These solutions deliver the unique capabilities for a more flexible IT infrastructure with unmatched simplicity, non-stop networking, optimized applications, and investment protection. As a result, organizations in a wide range of industries can achieve their most critical business objectives with greater simplicity and a faster return on investment.

For more information about Brocade products and solutions, visit www.brocade.com.

Corporate Headquarters
San Jose, CA USA
T: +1-408-333-8000
info@brocade.com

European Headquarters
Geneva, Switzerland
T: +41-22-799-56-40
emea-info@brocade.co

Asia Pacific Headquarters
Singapore
T: +65-6538-4700
apac-info@brocade.com

© 2010 Brocade Communications Systems, Inc. All Rights Reserved. 09/10 GA-WP-1522-00

Brocade, the B-wing symbol, BigIron, DCFM, DCX, Fabric OS, FastIron, IronView, NetIron, SAN Health, ServerIron, TurboIron, and Wingspan are registered trademarks, and Brocade Assurance, Brocade NET Health, Brocade One, Extraordinary Networks, MyBrocade, and VCS are trademarks of Brocade Communications Systems, Inc., in the United States and/or in other countries. Other brands, products, or service names mentioned are or may be trademarks or service marks of their respective owners.

Notice: This document is for informational purposes only and does not set forth any warranty, expressed or implied, concerning any equipment, equipment feature, or service offered or to be offered by Brocade. Brocade reserves the right to make changes to this document at any time, without notice, and assumes no responsibility for its use. This informational document describes features that may not be currently available. Contact a Brocade sales office for information on feature and product availability. Export of technical data contained in this document may require an export license from the United States government.

BROCADE