DATA CENTER

Brocade VDX Deployment Guide Addendum

Brocade VCS Fabric Technology and Virtual Link Aggregation Group (vLAG) with Brocade Network OS v2.1.1

BROCADE

CONTENTS

Introduction 3
Purpose 3
Usage: vLAG to a Server 4
vLAG to a Server 4
vLAG to a Server with Virtual Machines 4
Usage: vLAG to an External Switch 4
vLAG to an External Switch 4
vLAG to Switches Enabled with Multi-Chassis Trunking 4
Deployment Considerations 4
vLAG Provisioning 4
vLAG Formation 4
LACP SYSTEM ID 5
vLAG Partner SID Validation 5
vLAG Minimum Required Links 5
BUM Traffic on a vLAG 5
vLAG Interface 5
vLAG Learning and Aging 5
MAC Movement with vLAG 5
vLAG and FCoE Traffic 5
IGMP Snooping and Static Multicast MAC Addresses on a vLAG 5
vLAG Statistics 5
Spanning Tree and vLAG 6
AMPP over vLAG 6
Additional Considerations 6
vLAG Enhancements 6
vLAG Configuration Guidelines with VMware ESX Server and Brocade VDX 6
vLAG Minimum Links 6
LACP SID and Selection Logic 6
Split Recovery 7
No Split Recovery 7
LACP Remote Partner Validation 7
Operational Considerations 7
Appendix A: Configurations 9
Brocade VCS Fabric Configurations: Dynamic LACP vLAG to Server 9
Brocade VCS Fabric Configurations: Static LACP vLAG 11
Brocade VCS Fabric Configurations: Dynamic LACP vLAG to MLX 12
Glossary 16
Related Documents 16
AboUt Brocade 17

INTRODUCTION

While Brocade Inter-Switch Links (ISLs) are used as interconnects between Brocade VDX switches within a Brocade VCS fabric, industry-standard LACP LAGs are supported for connecting to other network devices outside the VCS fabric. Typically, LACP LAGs can only be created using ports from a single physical switch to a second physical switch. In a VCS fabric, a vLAG can be created using ports from two Brocade VDX switches to a device to which both Brocade VDX switches are connected. This provides an additional degree of device-level redundancy, while providing active-active link-level load-balancing.

PURPOSE

Multi-Chassis Trunking (MCT) is an industry-accepted solution to avoid spanning tree on multiple ISL connections. LAG-based MCT is a special case of LAG, covered in IEEE 802.3ad, in which one end of a LAG can terminate on two separate switches. Virtual LAG (vLAG), an innovation that is included in Brocade VCS Fabric technology, extends the concept of LAG to include edge ports on multiple VCS switches. Edge ports in a vLAG support both classic Ethernet and DCB (Data Center Bridging) Ethernet extensions. Therefore, any edge port can forward IP and Fibre Channel over Ethernet (FCoE) traffic over a vLAG, as shown in Figure 1.

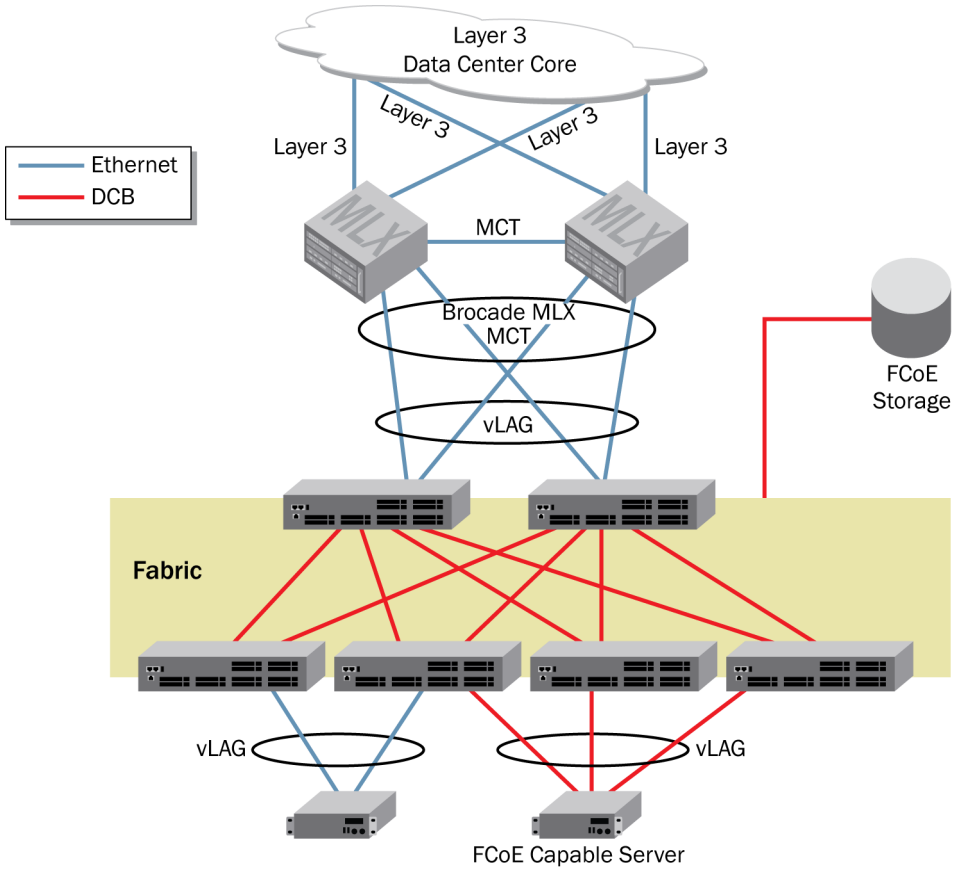

Figure 1: Using VCS vLAG

Usage: vLAG to a Server

vLAG to a Server

Servers with dual network interface cards (NICs) that connect to two independent Top-of-Rack (ToR) switches is an important use case, as shown in Figure 1. NIC teaming, commonly deployed in such scenarios, is subject to a significant limitation: lack of load-balancing for traffic flowing from the ToRs to the server with dual active-active links.

Using vLAG between a server and switches in a VCS fabric provides these additional benefits over NIC teaming:

- Redundancy and load-balancing based on IEEE 802.3ad LAG standards
- Deployment flexibility with the capability of including more than two ToRs within a LAG
- All MAC addresses behind the vLAG treated as multihomed to the VCS control plane, resulting in traffic being load-balanced across the TRILL network
- Adaptive load-balancing in the TRILL network due to any vLAG port and switch membership change
- Auto-detection of improper configuration using LACP
- Adaptive load-balancing from the server due to member port state change or MAC move
- The server sends out a single Internet Group Management Protocol (IGMP) join via vLAG. The VCS control plane adapts to the vLAG member change and delivers the multicast traffic through an available link in the vLAG, using IGMP snooping.

vLAG to a Server with Virtual Machines

Virtualized servers connecting to a VCS fabric via a hypervisor is an important use case, since some hypervisors do not support LACP, so static LAG configuration at the server may be required. Virtual Machine (VM) migration between servers that are connected to the same fabric is treated as a MAC address move from one vLAG logical interface to another vLAG logical interface.

Usage: vLAG to an External Switch

vLAG to an External Switch

An IEEE 802.3ad standard-based LAG is formed when an external switch connects to any Brocade VDX switch in the VCS fabric via vLAG. All MAC addresses behind the vLAG are multihomed with active-active path protection.

vLAG to Switches Enabled with Multi-Chassis Trunking

An IEEE 802.3ad standard-based LAG is formed when an MCT-enabled external switch pair connects to any Brocade VDX switch in the VCS fabric via vLAG. All MAC addresses behind the vLAG are multihomed with active-active path protection.

Deployment Considerations

vLAG Provisioning

Provisioning a vLAG is identical to provisioning LAG on a classic Ethernet switch. A “channel-group” number is assigned to an interface to identify which vLAG the interface belongs to. Interfaces in a vLAG can include any edge port on any switch in the fabric. Consult the *Brocade Network Operating System Release Notes* for the maximum number of supported links in a vLAG and the number of vLAGs per Ethernet fabric.

vLAG Formation

The VCS distributed control plane provides LACP between participating switches when forming a vLAG. A vLAG membership set is represented in the form of {RB x.port y,...}. LACP uses the following information to form a vLAG:

LACP SYSTEM ID

The LACP system ID is equal to the Bridge MAC, Same Partner System MAC, Same Partner Operational Key, and Same Partner Administrative Key. Any change to the partner attributes triggers removal of a member port from the vLAG.

vLAG Partner SID Validation

LACP PDU frames are exchanged from a VCS-enabled switch and an end device (switch or host). Included in the exchange is a unique System ID (SID) for the vLAG. Any VCS-enabled switch participating in the vLAG uses the same SID on its ports that participate in the vLAG. The remote device sends its own SID, which must be the same on all switches with ports participating in the vLAG. If the remote device SID received on a vLAG port is not the same, that port is not added to the vLAG.

vLAG Minimum Required Links

A further option is to require a minimum number of active links in the vLAG for it to form. If the minimum number is not available at any time, the vLAG does not form.

BUM Traffic on a vLAG

BUM (Broadcast, Unknown Unicast, and Multicast) traffic is carried on the primary interface of the vLAG. The primary interface can be a trunk with up to eight ports per trunk. The first operational interface of the vLAG becomes the primary link, and the RBridge with that interface becomes the primary RBridge. If the primary link goes down, and if there is another interface in the vLAG on the primary RBridge, then that interface becomes the primary link. If there are no other links on the primary RBridge in the vLAG, then a new RBridge and interface are selected as the primary RBridge and primary link. Each switch with a link in a vLAG monitors the health of links in its vLAGs and notifies other switches in the fabric if any problem occurs with any of its vLAG links.

vLAG Interface

A vLAG is a port-channel interface and is identified with a port-channel number equal to the channel- group number that is configured for its ports. A MAC is associated with each vLAG port-channel number. All protocols running over a vLAG use this MAC as the source address.

vLAG Learning and Aging

Fabric switches are aware of the vLAG RBridge ID, along with its member RBridge and port pair set that are associated with a vLAG. A MAC address that is learned over a vLAG is treated as a multihome MAC address and is reachable via all participating switches that have an interface in that vLAG. A MAC that is learned on a vLAG is aged out only if there is no data plane traffic on any interface in the vLAG.

MAC Movement with vLAG

A MAC address that is learned on a vLAG can move to another vLAG or to any another edge port in the fabric. The MAC move is detected by the new edge port and causes a fabric-wide update of the new MAC location for all switches in the fabric.

vLAG and FCoE Traffic

The vLAG feature does not support FCoE traffic, due the requirement of in order delivery of frames for FCoE, which is not provided with vLAG.

IGMP Snooping and Static Multicast MAC Addresses on a vLAG

An IGMP join on any of the vLAG interfaces results in the entire vLAG being one of the receivers of the multicast group. The multicast group membership is then distributed to all participating interfaces in the vLAG. The same holds for static multicast MAC addresses that have a vLAG as one of the expansion ports.

vLAG Statistics

Statistics for vLAG are reported like regular LAG statistics.

Spanning Tree and vLAG

All spanning tree BPDUs are treated as data packets. A BPDU that is received on any vLAG interface is transparently forwarded as data through the fabric. When a BPDU arrives on a multicast tree in the fabric, the BPDU is transmitted on the vLAG primary link. As discussed earlier, an edge port can be configured to block BPDU traffic.

AMPP over vLAG

A vLAG can include a port profile port so that AMPP (Automatic Migration of Port Profiles) features are supported on the vLAG.

Additional Considerations

vLAG Enhancements

In Brocade Network OS v2.1, the vLAG feature is enhanced to remove several usage restrictions imposed in the previous Brocade Network OS releases. The highlights of vLAG enhancement in Brocade Network OS release 2.1 are these:

- The ability to specify a minimum number of links that must be active on a vLAG before it can form aggregation is now supported in VCS mode. Earlier, this was supported only in standalone mode. The existing minimum-links CLI under the port-channel interface is now available in VCS mode.
- The ability to validate remote partner for dynamic vLAG is also now available.
- The maximum number of RBridges participating in a vLAG is now increased to four.
- The maximum number of ports participating in a vLAG is 32, with 16 from a single RBridge.

vLAG Configuration Guidelines with VMware ESX Server and Brocade VDX

VMware recommends configuring an EtherChannel when the administrator chooses IP-based hashing as NIC teaming. All other NIC teaming options should use regular switch port configuration.

vLAG Minimum Links

The minimum links feature allows the user to specify the minimum number of links that must be active on the vLAG before the links can be aggregated. Until the minimum number of links is reached, the port channel will show “protocol down.” The default minimum number of links to form an aggregator is 1. The minimum link configuration allows the user to create vLAGs with a strict lower limit on active participating port members.

As with all other port-channel configuration commands executed on a VCS fabric operating in Fabric Cluster mode, the user is required to configure the new minimum link value on each RBridge that is participating in the vLAG. The port channel is operationally down if the number of active links in a vLAG falls below the minimum number of links required to keep the port channel logically up. Similarly, the port channel is operationally up when the number of active links in the vLAG becomes equal to the minimum number of links required to bring the port channel logically up. The events that trigger link active count change are these: an active link going up or down, a link being added to or deleted from a vLAG, or a participating RBridge coming back up or going down. Please note that only ports with the same speed are aggregated.

LACP SID and Selection Logic

As part of establishing dynamic LACP LAGs (or port channels), LACP PDU frames are exchanged between the switch and the end devices. The exchange includes a unique identifier for both the switch and device, which is used to determine which port channel a link should be associated with. In Brocade Network OS v2.1, additional support is added for selecting a unique and consistent Local SID (LACP System ID), which is shared between all RBridges that are connected to the same vLAG. This SID is unique for each switch in the VCS fabric.

During vLAG split and rejoin events, when the member RBridge leaves from or joins into the cluster, SID reselection logic is enhanced to support operation of the new feature that controls split recovery.

Split Recovery

In Brocade Network OS v2.1.0, with the "no-ignore-split" parameter, SID is derived using the actual MAC address of one of the participating RBridges (SID Master). So, when a vLAG is formed, the SID from the first RBridge that is configured into the vLAG is used. If the RBridge owning the SID of the vLAG leaves the cluster, a new SID is selected from the MAC of one of the other RBridges, and vLAG converges again.

No Split Recovery

In this mode, a VSID (or Virtual SID—a unique identifier derived using VCS-ID, similar to Brocade Network OS v2.0) is used as LACP SID for the vLAG. Upon split, all RBridges continue to advertise the same VSID as their LACP SID. No reconvergence is needed when nodes leave or (re)join the vLAG in VCS mode.

LACP Remote Partner Validation

A vLAG's member links in different RBridges sometimes may be connected to other standalone switches. In the previous Brocade Network OS releases, there was no validation of the remote partner information for a dynamic vLAG across the RBridges. The user had the responsibility of assuring that the links in the dynamic vLAG were all connected to the same remote device and key. In Brocade Network OS v2.1.0, remote partner validation support is added, which ensures that the first received partner information is sent out to all member RBridges. If the vLAG has a member in another RBridge, the aggregation fails and vLAG is not formed.

Operational Considerations

To ensure that the RBridges that join the fabric (RB3 in Figure 2) pick up the partner state, the remote SID state for vLAGs is included in the local database exchange. The following show command provides information on the SID Master:

show lacp sys-id:

```
Port-channel Po 10 - System ID: 0x8000,00-05-33-8d-0e-25 - SID Master: rbridge-id 1
(ignore-split Disabled)

Port-channel Po 20 - System ID: 0x8000,01-e0-52-00-00-13 - SID Master:
N/A                (ignore-split Enabled - Default)
```

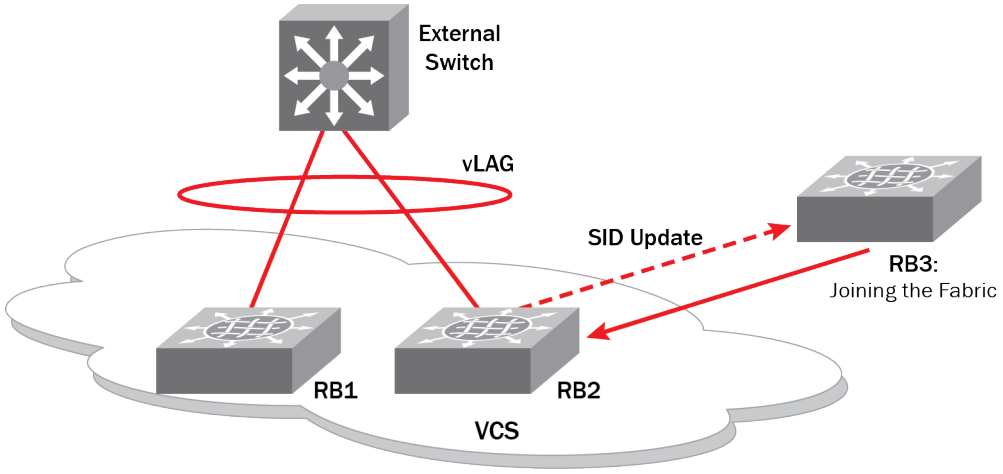

Figure 2: SID Update on LACP Join

If both RBridges are connected to the same remote device, the remote SID should match.

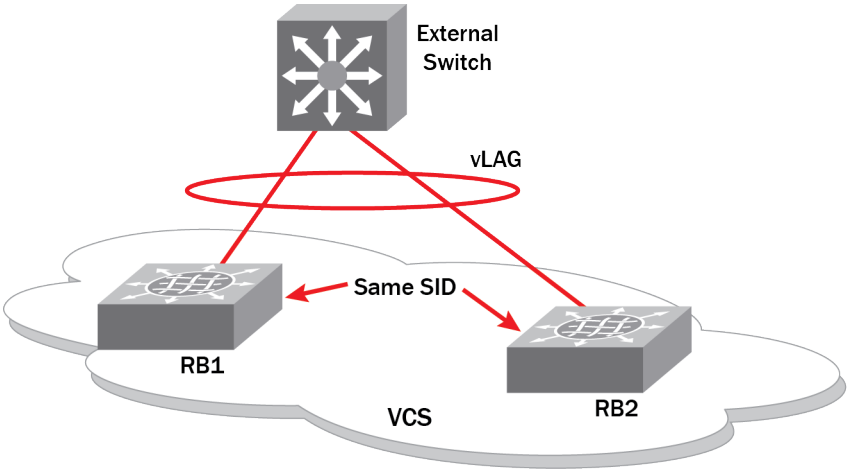

Figure 3: LACP SID Assignment

If the RBridges are configured for the same vLAG, but connected to different remote devices, the remote SID values will not match. Since the local SID state will be forced to synchronize between the connecting RBridges, the side whose local SID is forced to change ends up with disabled links.

APPENDIX A: CONFIGURATIONS

Brocade VCS Fabric Configurations: Dynamic LACP vLAG to Server

1. Configure vLAG Port-channel Interface on Brocade VDX 6710-RB21 to NetApp FAS 3050 Gigabit Ethernet 0/c:

```
VDX6710-RB21# conf t
Entering configuration mode terminal
VDX6710-RB21(config)# interface Port-channel 33
VDX6710-RB21(config-Port-channel-33)#  vlag ignore-split
VDX6710-RB21(config-Port-channel-33)#  speed 1000
VDX6710-RB21(config-Port-channel-33)#  description NetApp3050-VDX
VDX6710-RB21(config-Port-channel-33)#  switchport
VDX6710-RB21(config-Port-channel-33)#  switchport mode access
VDX6710-RB21(config-Port-channel-33)#  switchport access vlan 1
VDX6710-RB21(config-Port-channel-33)#  no shutdown
```

2. Configure Interface Gigabit Ethernet 21/0/1 on Brocade VDX6710-RB21:

```
VDX6710-RB21# conf t
Entering configuration mode terminal
VDX6710-RB21(config)# interface GigabitEthernet 21/0/1
VDX6710-RB21(conf-if-gi-21/0/1)#  description NetApp3050_e0c
VDX6710-RB21(conf-if-gi-21/0/1)#  channel-group 33 mode active type standard
VDX6710-RB21(conf-if-gi-21/0/1)#  lacp timeout long
VDX6710-RB21(conf-if-gi-21/0/1)#  no shutdown
```

3. Configure vLAG Port-channel Interface on Brocade VDX 6710-RB22 to NetApp FAS 3050 Gigabit Ethernet 0/d:

```
VDX6710-RB22# conf t
Entering configuration mode terminal
VDX6710-RB22(config)# interface Port-channel 33
VDX6710-RB22(config-Port-channel-33)#  vlag ignore-split
VDX6710-RB22(config-Port-channel-33)#  speed 1000
VDX6710-RB22(config-Port-channel-33)#  description NetApp3050-VDX
VDX6710-RB22(config-Port-channel-33)#  switchport
VDX6710-RB22(config-Port-channel-33)#  switchport mode access
VDX6710-RB22(config-Port-channel-33)#  switchport access vlan 1
VDX6710-RB22(config-Port-channel-33)#  no shutdown
```

4. Configure Interface Gigabit Ethernet 22/0/1 on Brocade VDX6710-RB22:

```
VDX6710-RB22# conf t
Entering configuration mode terminal
VDX6710-RB22(config)# interface GigabitEthernet 22/0/1
VDX6710-RB22(conf-if-gi-22/0/1)#  channel-group 33 mode active type standard
VDX6710-RB22(conf-if-gi-22/0/1)#  lacp timeout long
VDX6710-RB22(conf-if-gi-22/0/1)#  no shutdown
```

5. Validate vLAG Port-channel Interface on Brocade VDX 6710-RB21 to NetApp FAS 3050 Gigabit Ethernet 0/c:

```
VDX6710-RB21# show interface Port-channel 33
Port-channel 33 is up, line protocol is up
Hardware is AGGREGATE, address is 0005.338c.adee
    Current address is 0005.338c.adee
Description: NetApp3050-VDX
Interface index (ifindex) is 671088673
Minimum number of links to bring Port-channel up is 1
MTU 2500 bytes
LineSpeed Actual     : 1000 Mbit
Allowed Member Speed : 1000 Mbit
```

6. Validate Interface Gigabit Ethernet 22/0/1 on Brocade VDX6710-RB22:

```
VDX6710-RB21# show interface gigabitethernet 21/0/1
GigabitEthernet 21/0/1 is up, line protocol is up (connected)
Hardware is Ethernet, address is 0005.338c.adb6
    Current address is 0005.338c.adb6
Fixed Copper RJ45 Media Present
Description: NetApp3050_e0c
Interface index (ifindex) is 90597048320
MTU 2500 bytes
LineSpeed      : 1000 Mbit, Duplex: Full
Flowcontrol rx: off, tx: off
```

7. Validate vLAG Port-channel Interface on Brocade VDX 6710-RB21 to NetApp FAS 3050 Gigabit Ethernet 0/c:

```
VDX6710-RB22# show interface Port-channel 33
Port-channel 33 is up, line protocol is up
Hardware is AGGREGATE, address is 0005.338c.d45a
    Current address is 0005.338c.d45a
Description: NetApp3050-VDX
Interface index (ifindex) is 671088673
Minimum number of links to bring Port-channel up is 1
MTU 2500 bytes
LineSpeed Actual     : 1000 Mbit
Allowed Member Speed : 1000 Mbit
Flowcontrol rx: off, tx: off
```

8. Validate Interface Gigabit Ethernet 22/0/1 on Brocade VDX6710-RB22:

```
VDX6710-RB22# show interface gigabitethernet 22/0/1
GigabitEthernet 22/0/1 is up, line protocol is up (connected)
Hardware is Ethernet, address is 0005.338c.d422
    Current address is 0005.338c.d422
Fixed Copper RJ45 Media Present
Interface index (ifindex) is 94892015616
MTU 2500 bytes
LineSpeed      : 1000 Mbit, Duplex: Full
Flowcontrol rx: off, tx: off
```

Brocade VCS Fabric Configurations: Static LACP vLAG

1. Configure vLAG Port-channel Interface on Brocade VDX 6730-RB3 to ESXi5-vswitch1:

```
VDX6730-RB3# conf t
Entering configuration mode terminal
VDX6730-RB3(config)# interface Port-channel 44
VDX6730-RB3(config-Port-channel-44)#  vlag ignore-split
VDX6730-RB3(config-Port-channel-44)#  description ESXi5-vSwitch1
VDX6730-RB3(config-Port-channel-44)#  switchport
VDX6730-RB3(config-Port-channel-44)#  switchport mode access
VDX6730-RB3(config-Port-channel-44)#  switchport access vlan 1
VDX6730-RB3(config-Port-channel-44)#  no shutdown
```

2. Configure Interface TenGigabit Ethernet 3/0/10 on Brocade VDX6720-RB3:

```
VDX6730-RB3# conf t
Entering configuration mode terminal
VDX6730-RB3(config)# interface TenGigabitEthernet 3/0/10
VDX6730-RB3(conf-if-te-3/0/10)#  description ESXi5-vmnic2
VDX6730-RB3(conf-if-te-3/0/10)#  channel-group 44 mode on type standard
VDX6730-RB3(conf-if-te-3/0/10)#  no shutdown
```

3. Configure vLAG Port-channel Interface on Brocade VDX 6720-RB4 to ESXi5-vswitch1:

```
VDX6720-RB4# conf t
Entering configuration mode terminal
VDX6720-RB4(config)# interface Port-channel 44
VDX6720-RB4(config-Port-channel-44)#  vlag ignore-split
VDX6720-RB4(config-Port-channel-44)#  description ESXi5-vSwitch1
VDX6720-RB4(config-Port-channel-44)#  switchport
VDX6720-RB4(config-Port-channel-44)#  switchport mode access
VDX6720-RB4(config-Port-channel-44)#  switchport access vlan 1
VDX6720-RB4(config-Port-channel-44)#  no shutdown
```

4. Configure Interface TenGigabit Ethernet 4/0/10 on Brocade VDX6720-RB4:

```
VDX6720-RB4# conf t
Entering configuration mode terminal
VDX6720-RB4(config)# interface TenGigabitEthernet 4/0/10
VDX6720-RB4(conf-if-te-4/0/10)#  description ESXi5-vmnic3
VDX6720-RB4(conf-if-te-4/0/10)#  channel-group 44 mode on type standard
VDX6720-RB4(conf-if-te-4/0/10)#  no shutdown
```

5. Validate vLAG Port-channel Interface on Brocade VDX 6730-RB3 to to ESXi5-vswitch1:

```
VDX6730-RB3# show interface Port-channel 44
Port-channel 44 is up, line protocol is up
Hardware is AGGREGATE, address is 0005.3391.3b24
    Current address is 0005.3391.3b24
Description: ESXi5-vSwitch1
Interface index (ifindex) is 671088684
Minimum number of links to bring Port-channel up is 1
MTU 2500 bytes
LineSpeed Actual     : 10000 Mbit
Allowed Member Speed : 10000 Mbit
Flowcontrol rx: off, tx: off
```

6. Validate Interface TenGigabit Ethernet 3/0/10 on Brocade VDX6730-RB3:

```
VDX6730-RB3# show interface tengigabitethernet 3/0/10
TenGigabitEthernet 3/0/10 is up, line protocol is up (connected)
Hardware is Ethernet, address is 0005.3391.3b12
    Current address is 0005.3391.3b12
Pluggable media present
Description: ESXi5-vmnic2
Interface index (ifindex) is 13288210441
MTU 2500 bytes
LineSpeed Actual     : 10000 Mbit
LineSpeed Configured : Auto, Duplex: Full
Flowcontrol rx: off, tx: off
```

7. Validate vLAG Port-channel Interface on Brocade VDX 6720-RB4 to to ESXi5-vswitch1:

```
VDX6720-RB4# show interface Port-channel 44
Port-channel 44 is up, line protocol is up
Hardware is AGGREGATE, address is 0005.3367.cafc
    Current address is 0005.3367.cafc
Description: ESXi5-vSwitch1
Interface index (ifindex) is 671088684
Minimum number of links to bring Port-channel up is 1
MTU 2500 bytes
LineSpeed Actual     : 10000 Mbit
Allowed Member Speed : 10000 Mbit
Flowcontrol rx: off, tx: off
```

8. Validate Interface TenGigabit Ethernet 4/0/10 on Brocade VDX6720-RB4:

```
VDX6720-RB4# show interface tengigabitethernet 4/0/10
TenGigabitEthernet 4/0/10 is up, line protocol is up (connected)
Hardware is Ethernet, address is 0005.3367.caea
    Current address is 0005.3367.caea
Pluggable media present
Description: ESXi5-vmnic3
Interface index (ifindex) is 17583177737
MTU 2500 bytes
LineSpeed Actual     : 10000 Mbit
LineSpeed Configured : Auto, Duplex: Full
Flowcontrol rx: off, tx: off
```

Brocade VCS Fabric Configurations: Dynamic LACP vLAG to MLX

For this scenario, you will have a two Brocade VDX Data Center Switches (VDX1 and VDX2) connecting to a single Brocade MLX® Router.

Interfaces 1/1 and 1/2 on the MLX connect to the Brocade VDX1 TenGigabitEthernet1/0/5 and TenGigabitEthernet 1/0/6, while MLX interfaces 1/3 and 1/4 connect to the Brocade VDX2 TenGigabitEthernet2/0/5 and TenGigabitEthernet 2/0/6.

1. Configure vLAG Port-channel Interface on Brocade MLX-facing Brocade VDXs:

```
lag "1" dynamic id 1
ports ethernet 1/1 to 1/4
 primary-port 1/1
deploy
port-name "scdemo09-eth4" ethernet 1/1
```

```
port-name "scdemo08-eth4" ethernet 1/2
port-name "scdemo07-eth4" ethernet 1/3
port-name "scdemo06-eth4" ethernet 1/4
```

2. Configure vLAG Port-channel Interface and associated interfaces on both Brocade VDX1s facing Brocade MLX:

```
interface TenGigabitEthernet 1/0/5
channel-group 1 mode active type standard
 lacp timeout long
 no shutdown

interface TenGigabitEthernet 1/0/6
channel-group 1 mode active type standard
 lacp timeout long
 no shutdown

interface Port-channel 1
 vlag ignore-split
 description 1
 switchport
 switchport mode trunk
 switchport trunk allowed vlan all
 switchport trunk tag native-vlan
 no shutdown
```

2. Configure vLAG Port-channel Interface and associated interfaces on both Brocade VDX2 facing Brocade MLX:

```
interface TenGigabitEthernet 2/0/5
channel-group 1 mode active type standard
 lacp timeout long
 no shutdown

interface TenGigabitEthernet 2/0/6
channel-group 1 mode active type standard
 lacp timeout long
 no shutdown

interface Port-channel 1
 vlag ignore-split
 description 1
 switchport
 switchport mode trunk
 switchport trunk allowed vlan all
 switchport trunk tag native-vlan
 no shutdown
```

3. Validate vLAG Port-channel Interface configuration on Brocade VDX1 facing Brocade MLX:

```
show port-channel 1
LACP Aggregator: Po 1 (vLAG)
 Aggregator type: Standard
Ignore-split is enabled
  Member rbridges:
    rbridge-id: 1 (2)
```

```
      rbridge-id: 2 (2)
    Admin Key: 0001 - Oper Key 0001
    Partner System ID - 0x0001,00-24-38-96-ae-00
    Partner Oper Key 0100
  Member ports on rbridge-id 1:
     Link: Te 1/0/5 (0x118050004) sync: 1
     Link: Te 1/0/6 (0x118060005) sync: 1
```

4. Validate vLAG Port-channel Interface configuration on Brocade VDX1 facing Brocade MLX:

```
sho port-channel 1
LACP Aggregator: Po 1 (vLAG)
 Aggregator type: Standard
Ignore-split is enabled
  Member rbridges:
    rbridge-id: 1 (2)
    rbridge-id: 2 (2)
  Admin Key: 0001 - Oper Key 0001
  Partner System ID - 0x0001,00-24-38-96-ae-00
  Partner Oper Key 0100
Member ports on rbridge-id 2:
   Link: Te 2/0/5 (0x218050004) sync: 1
   Link: Te 2/0/6 (0x218060005) sync: 1   *
```

5. Validate vLAG Port-channel Interface configuration on Brocade MLX-facing Brocade VDX:

```
telnet@MLXe-4-U_VICT(config)#sho lag
Total number of LAGs:          1
Total number of deployed LAGs: 1
Total number of trunks created:1 (127 available)
LACP System Priority / ID:     1 / 0024.3896.ae00
LACP Long timeout:             90, default: 90
LACP Short timeout:            3, default: 3

=== LAG "1" ID 1 (dynamic Deployed) ===
LAG Configuration:
   Ports:         e 1/1 to 1/4
   Port Count:    4
   Primary Port:  1/1
   Trunk Type:    hash-based
   LACP Key:      100

Port Individual Configuration:
   Port Name
   1/1  scdemo09-eth4
   1/2  scdemo08-eth4
   1/3  scdemo07-eth4
   1/4  scdemo06-eth4

Deployment:  Trunk ID 1, Active Primary 1/2, base fid: 0x0800
```

```
Port Link Port-State  Dupl Speed Trunk Tag Priori MAC            Name           Type
1/1   Up   Forward    Full 10G   1     Yes level0 0024.3896.ae00 scdemo09-eth4  default-port
1/2   Up   Forward    Full 10G   1     Yes level0 0024.3896.ae00 scdemo08-eth4  default-port
1/3   Up   Forward    Full 10G   1     Yes level0 0024.3896.ae00 scdemo07-eth4  default-port
1/4   Up   Forward     Full 10G   1    Yes level0 0024.3896.ae00 scdemo06-eth4  default-port

Port  [Sys P] [Port P] [ Key ] [Act][Tio][Agg][Syn][Col][Dis][Def][Exp][Ope]
1/1        1        1     100   Yes   L   Agg  Syn  Col  Dis  No   No   Ope
1/2        1        1     100   Yes   L   Agg  Syn  Col  Dis  No   No   Ope
1/3        1        1     100   Yes   L   Agg  Syn  Col  Dis  No   No   Ope
1/4        1        1     100   Yes   L   Agg  Syn  Col  Dis  No   No   Ope
```

GLOSSARY

BPDU	Bridge Protocol Datagram Unit
ELD	Edge Loop Detection protocol. Used on the edge ports of a VCS fabric to detect and remove loops.
MAC	Media Access Control. In Ethernet, it refers to the 48-bit hardware address.
PDU	Protocol Datagram Unit
RBridge	Routing Bridge. A switch that runs the TRILL (Transparent Interconnection of ***Lots of Links***) protocol.
RSTP	Rapid Spanning Tree Protocol. An IEEE standard for building a loop-free LAN (Local-Area Network), which allows ports to rapidly transition to forwarding state.
VCS	Virtual Cluster Switching. Brocade® VCS® Fabric technology is a method of grouping a fabric of switches together to form a single virtual switch that can provide a transparent bridging function.
vLAG	Virtual Link Aggregation Group. You can create a LAG using multiple switches in a VCS fabric. vLAG provides better high availability and faster protection switching than a normal LAG.
VLAN	Virtual LAN. Subdividing a LAN into logical VLANs allows separation of traffic from different sources within the LAN.
xSTP	An abbreviation used in this document to indicate all types of Spanning Tree Protocol, for instance, STP, RSTP, MSTP (Multiple STP), PVST+ (Per VLAN Spanning Tree Plus), and RPVST+ (Rapid PVST+).

RELATED DOCUMENTS

For more information about Brocade VCS Fabric technology, please see the Brocade VCS Fabric Technical Architecture:

http://www.brocade.com/downloads/documents/technical_briefs/vcs-technical-architecture-tb.pdf

For the Brocade Network Operating System Admin Guide and Network OS Command Reference:

http://www.brocade.com/downloads/documents/product_manuals/B_VDX/NOS_AdminGuide_v211.pdf

http://www.brocade.com/downloads/documents/product_manuals/B_VDX/NOS_CommandRef_v211.pdf

The Network OS Release notes can be found at http://my.brocade.com

For more information about the Brocade VDX® Series of switches, please see the product data sheets:

- Brocade VDX 6710 Data Center Switch:
  http://www.brocade.com/products/all/switches/product-details/vdx-6710-dc-switches/index.page
- Brocade VDX 6720 Data Center Switch:
  http://www.brocade.com/products/all/switches/product-details/vdx-6720-dc-switches/index.page
- Brocade VDX 6730 Data Center Switch:
  http://www.brocade.com/products/all/switches/product-details/vdx-6730-dc-switches/index.page

ABOUT BROCADE

As information becomes increasingly mobile and distributed across the enterprise, organizations today are transitioning to a highly virtualized infrastructure, which often increases overall IT complexity. To simplify this process, organizations must have reliable, flexible network solutions that utilize IT resources whenever and wherever needed—enabling the full advantages of virtualization and cloud computing.

As a global provider of comprehensive networking solutions, Brocade has more than 15 years of experience in delivering Ethernet, storage, and converged networking technologies that are used in the world's most mission-critical environments. Based on the Brocade One™ strategy, this unique approach reduces complexity and disruption by removing network layers, simplifying management, and protecting existing technology investments. As a result, organizations can utilize cloud-optimized networks to achieve their goals of non-stop operations in highly virtualized infrastructures where information and applications are available anywhere.

For more information, visit www.brocade.com.

© 2012 Brocade Communications Systems, Inc. All Rights Reserved. 03/12 GA-DG-438-00

Brocade, Brocade Assurance, the B-wing symbol, DCX, Fabric OS, MLX, SAN Health, VCS, and VDX are registered trademarks, and AnyIO, Brocade One, CloudPlex, Effortless Networking, ICX, NET Health, OpenScript, and The Effortless Network are trademarks of Brocade Communications Systems, Inc., in the United States and/or in other countries. Other brands, products, or service names mentioned may be trademarks of their respective owners.

Notice: This document is for informational purposes only and does not set forth any warranty, expressed or implied, concerning any equipment, equipment feature, or service offered or to be offered by Brocade. Brocade reserves the right to make changes to this document at any time, without notice, and assumes no responsibility for its use. This informational document describes features that may not be currently available. Contact a Brocade sales office for information on feature and product availability. Export of technical data contained in this document may require an export license from the United States government.