BROCADE MOBILITY 6511 WALLPLATE ACCESS POINT

CAMPUS NETWORK

Wired and Wireless 802.11n Wallplate Access Point Delivers Convenience, Speed, and Security

HIGHLIGHTS

- Provides a wireless 802.11n dual-band Access Point (AP) in a unique wallplate design ideal for college dormitory or hotel room deployments
- Installs in minutes, using existing 802.3af Ethernet CAT 5/6 cabling in any standard telecom wall box
- Eliminates controller bottlenecks and lays the foundation for 802.11ac with Distributed AP Forwarding
- Helps reduce operational costs by providing remote management support with built-in remote Radio Frequency (RF) scanning
- Increases capacity by leveraging an optional three-port Fast Ethernet wired switch module
- Delivers enterprise-class security with 24×7 network protection and a dedicated IPS/IDS sensor for instant identification and reporting of unauthorized users

Conventional Access Points (APs) require careful planning, in addition to pulling cable and installing ceiling brackets. Sometimes organizations need wireless connectivity installed in minutes, not hours. As a component of the Brocade® HyperEdge™ Architecture, the Brocade Mobility 6511 Wallplate Access Point (AP) integrates a dual-band 802.11a/b/g/n AP and switched Fast Ethernet connectivity into a sleek design that is fast and easy to deploy on any wall surface or structured wiring telecom box using the existing CAT 5/6 cabling.

The Brocade Mobility 6511 is ideal for dormitories, patient rooms, guest rooms, and other multi-dwelling units where walls, metal doors, mirrors, plumbing, and wall tiles impede hallway Wi-Fi signals. It features a snap-in port for any keystone-style connector—such as RJ11 or TV coax—so multiple services can be supported on a single integrated AP. Guest rooms often require additional Ethernet ports for voice service, device monitoring, or even guest wireline. A snap-on three-port wired Fast Ethernet expansion module dramatically reduces deployment costs by providing multiple wired Ethernet switch ports while eliminating multiple CAT 5/6 cables to a single room.

The Brocade Mobility 6511 provides enterprises and branch offices with key functions, including 802.1X and firewall capabilities on wireless and wired ports, intrusion prevention, fast roaming, and Quality of Service (QoS) traffic handling.

NON-BLOCKING, HIGH-PERFORMANCE 802.11n ARCHITECTURE

Fully compliant with 802.11n Dynamic Frequency Selection (DFS), the Brocade Mobility 6511 delivers speeds up to 300 Mbps—six times the bandwidth of an 802.11a/g AP. An adaptive architecture enables two modes of operation without changing the firmware—as a stand-alone AP

BROCADE

BROCADE HYPEREDGE ARCHITECTURE

The Brocade HyperEdge Architecture brings campus networks into the modern era to better support mobility, security, and application agility. This evolutionary architecture integrates innovative wired and wireless technologies to streamline application deployment, simplify network management, and reduce operating costs.

The HyperEdge Architecture enables organizations to build networks that are:

- **Agile:** By eliminating Spanning Tree Protocol (STP) between HyperEdge Domain switches through a flatter Layer 2 design, the HyperEdge Architecture increases link utilization and reduces application deployment complexity. The Distributed AP Forwarding functionality of Brocade wireless Access Points (APs) efficiently secures and directs mobile traffic at the network edge without tunneling data back to a central controller at the network core.
- **Automated:** By grouping premium and entry-level switches with intelligent wireless APs into a consolidated management domain, HyperEdge Domains eliminate the need to provision and manage devices individually—simplifying network deployment and management.
- **Cost-effective:** The HyperEdge Architecture enables the propagation of advanced features and services from premium switches to entry-level switches, allowing IT organizations to purchase only what they need today and add intelligent services as the business evolves. Further cost savings is achieved with Brocade wireless solutions using controller-less or controller-shared license deployment options.

or as a wireless controller-adopted AP for centralized management. Self-configuring deployment over Layer 2 and Layer 3 networks is supported with automatic discovery of the controllers by remotely located APs. Stand-alone or controller-adopted APs leverage Distributed AP Forwarding to forward traffic locally, eliminating controller bottlenecks or single points of failure and laying the foundation for 802.11ac.

ENTERPRISE-CLASS SECURITY

Only authorized 802.1X users can access the network, which protects the network perimeter and valuable resources. The Brocade Mobility 6511 stateful firewall supports key standards-based security protocols to help ensure enterprise-level protection for wired and wireless network infrastructures—as well as for data in transmission over WLANs.

In addition, the Brocade Mobility 6511 is designed to function as a wireless Intrusion Prevention System (IPS)/Intrusion Detection System (IDS) sensor, enabling automatic 24×7 monitoring of wireless networks. For advanced security, organizations can also add Role-Based Access Control (RBAC) and the Motorola AirDefense® wireless IPS for Brocade Mobility.

FAST ROAMING AND QUALITY OF SERVICE SUPPORT

The Brocade Mobility 6511 helps ensure a high-quality user experience with fast, secure roaming in Layer 2 and Layer 3 deployments. In addition, the network optimizes mobile performance with load balancing, preemptive roaming, and rate scaling. The intelligent Brocade Mobility 6511 provides QoS handling and processing right in the AP; it recognizes the multimedia traffic and ensures optimal paths and QoS.

By enabling video processing in the AP, the Brocade Mobility 6511 allows organizations to scale a simulcast of a multicast session to more than 100 clients per AP. This capability—in addition to support for Virtual LANs (VLANs) within the architecture—significantly reduces the need to broadcast traffic to non-participants, allowing fine-tuning and optimization of the network.

MULTIPURPOSE FLEXIBILITY, FAST ROI

The Brocade Mobility 6511 provides multifunction, multipurpose adaptability in a cost-effective mobility solution. It can be deployed as a stand-alone or centrally managed device to deliver wired and wireless voice and data services, and wireless IPS sensor functionality, in a single device—reducing capital and operational expenditures.

CONSOLIDATED NETWORK MANAGEMENT

To reduce complexity and the costs of managing campus environments, Brocade Network Advisor works seamlessly within the HyperEdge Architecture to discover, manage, and deploy configurations to groups of IP devices. By using the Brocade Network Advisor Device Configuration Manager tool, organizations can configure VLANs, manage wireless AP realms, group WLAN switches into domains for Layer 3 mobility support, or execute Command Line Interface (CLI) commands on specific devices or groups of devices. Brocade Network Advisor centralizes management of the entire family of Brocade wired and Brocade Mobility wireless products, including Brocade Mobility 6511 APs and Brocade Mobility wireless controllers.

Figure 1.
The Brocade Mobility 6511 Wallplate AP and available accessories.

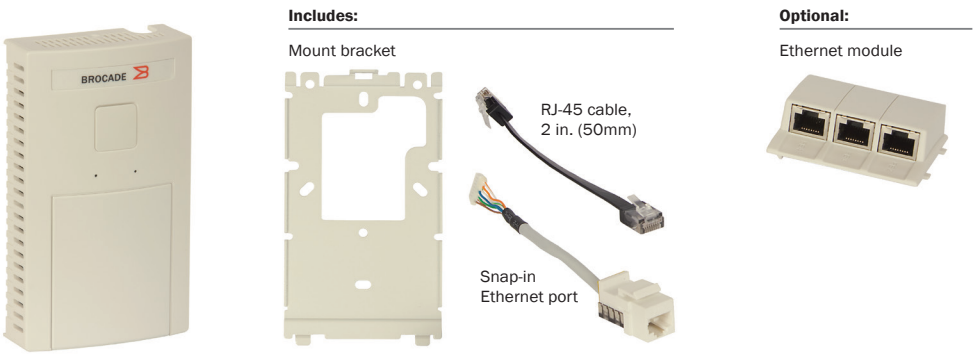

BROCADE MOBILITY 6511 AP SPECIFICATIONS

Performance and Supported Configurations	
Radio options	Single radio 802.11a/n or 802.11b/g/n support with MIMO
Band	2.4 GHz; or 5.2 GHz (actual operating frequencies depend on regulatory rules and certification agency)
Mode operation	Access Point (AP)
WLAN support	16 configurable WLANs with up to 4095 VLANs per AP
BSS support	8 BSSIDs, 16 SSIDs
Powered clients	CAM- and PSP-powered clients supported
Concurrent clients	Up to 128 client associations per radio
Traffic Management and Quality of Service (QoS)	
QoS	Voice prioritization; WMM-power save with TSPEC Admission Control; WMM U-APSD; Layer 1–4 packet classification; 802.1p; 802.11e; 802.11k; DiffServ/TOS, SVP, SIP CAC
Rate limiting	Broadcast/multicast transmit rate control, client rate limiting, per-radio client limit
VLAN support	16 VLANs supported per AP, 802.1Q VLAN trunking and tagging, dynamic user-based VLANs using EAP authentication
Client load balancing	Neighbor APs share client load by client count or traffic load
Wireless Security	
Wireless IPS/IDS	Rogue detection, radio provides dedicated full-time 24×7 scanning of 2.4 GHz and 5.0 GHz bands for air monitoring, wireless IPS, onboard IDS
Authentication	ACLS; Pre-Shared Keys (PSK); 802.1X/EAP – Transport Layer Security (TLS); Tunneled Transport Layer Security (TTLS); Protected EAP (PEAP); EAP-SIM; local authentication database, AAA Server; support for RADIUS, LDAP, and ActiveDirectory
Encryption	WEP 40/128 (RC4); WPA-TKIP; WPA2-CCMP (AES); 802.11i WPA2-TKIP; Multi-Cipher support
Guest access	Built-in captive portal, customizable login/welcome pages, URL redirection, support for external authentication and billing systems: client-client transmission disallow
Stateful firewall	Stateful Layer 3 packet inspection; stateful Layer 2–7 wireless firewall
Networking Services	
Layer 2 and Layer 3	802.1D-1999 Ethernet bridging; 802.11-802.3 bridging; 802.1Q VLAN trunking and tagging; DHCP server/client, BOOTP client, Dynamic DNS (DynDNS), PPPoE, NAT, LLDP, IP Filtering, Content Filtering (files or URL extensions, HTTP, SMTP, and FTP requests), NAT, ARP/Proxy ARP

Management	
Configuration	Flash-based Web User Interface (UI), human-readable configuration file import/export, CLI (RS-232 or Telnet), SSH, HTTP/S, MIB, programmable SNMP v1/v2c/v3 trap support
Statistics	LAN, wireless, and associated stations (accessible via Web UI)
Software/firmware updates	FTP or TFTP, remote auto available
Deployment	
Options	Full-featured AP for local or remote edge deployments is centrally managed by WLAN controller Plug-and-play deployment over Layer 2/3 networks
Physical Characteristics	
Dimensions	5.00 in. × 2.75 in. × 1.10 in. (12.700 cm × 6.985 cm × 2.900 cm)
Weight	0.5 lb with mounting plate (0.2 kg)
Housing	Plastic and metal
Available mounting configuration	Universal mounting bracket for worldwide telecom plates; mounting options include over a telecom wallplate or a flush surface mount
LED indicators	Two single-color status LEDs; power, error, packets, operating frequency
Ethernet ports	One to four switched Fast Ethernet ports, auto-sensing 10/100 Base-T Ethernet; 802.af on the uplink LAN port, RJ-45
Environmental Specifications	
Temperature	Operating: 32°F to 104°F (0°C to 40°C) Non-operating: −40°F to 158°F (−40°C to 85°C)
Humidity	Operating: 5% to 95% relative humidity non-condensing Non-operating: 95% relative humidity non-condensing
Altitude	Operating: 8000 ft. (2438 m) at 82°F (28°C) Non-operating: 30,000 ft. (4572 m) at 53°F (12°C)
Electrostatic discharge	+/−15 kV air, +/−8 kV contact at 50% relative humidity
Power Specifications	
Power	AP+1 LAN port is approximately 5.5 W typical AP+4 LAN ports is approximately 8 W
Operating current and voltage	36 to 57 VDC Not to exceed 250 mA at 48 VDC
Integrated Power over Ethernet (PoE)	802.3af-compliant uplink LAN port
Radio Specifications	
Wireless medium	Direct Sequence Spread Spectrum (DSSS), Orthogonal Frequency Division Multiplexing (OFDM), and 1×2 or 2×2 spatial multiplexing (MIMO) with two spatial streams
Network standards	802.11a, 802.11b, 802.11g, 802.11n, 802.11d, 802.11h, and 802.11i WPA2, WMM, and WMM-UAPSD

BROCADE GLOBAL SERVICES

Brocade Global Services has the expertise to help organizations build scalable, efficient cloud infrastructures. Leveraging 15 years of expertise in storage, networking, and virtualization, Brocade Global Services delivers world-class professional services, technical support, network monitoring services, and education, enabling organizations to maximize their Brocade investments, accelerate new technology deployments, and optimize the performance of networking infrastructures.

CLOUD-OPTIMIZED NETWORK ACQUISITION

Brocade helps organizations easily address their information technology requirements by offering flexible network acquisition and support alternatives to meet their financial needs. Organizations can select from purchase, lease, and Brocade Network Subscription options to align network acquisition with their unique capital requirements and risk profiles. To learn more, visit www.Brocade.com/CapitalSolutions.

MAXIMIZING INVESTMENTS

To help optimize technology investments, Brocade and its partners offer complete solutions that include professional services, technical support, and education. For more information, contact a Brocade sales partner or visit www.brocade.com.

BROCADE MOBILITY 6511 AP SPECIFICATIONS (CONTINUED)

Radio Specifications (continued)	
Channelization	20 MHz and 40 MHz channels
Packet aggregation	AMSDU, AMPDU
Inter-frame spacing	Reduced
MIMO power save	Static and dynamic
Data rates supported	802.11b/g: 1, 2, 5.5, 11 Mbps 802.11g: 6, 9, 12, 18, 24, 36, 48, 54 Mbps 802.11a: 6, 9, 12, 18, 24, 36, 48, 54 Mbps 802.11n: MCS0 to MSC15, HT20 and HT40
Operating channels	All channels from 5180 to 5825 MHz, 802.11 DFS Channels 1 to 13 (2412 to 2472 MHz) Actual operating frequencies depend on regulations
Operating frequencies	2.4 GHz: 2400 to 2483.5 MHz 5.2 GHz: 5150 to 5250 MHz; 5725 to 5850 MHz Actual operating frequencies depend on national regulatory limits
Maximum available transmit power per antenna	2.4 GHz: 24 dBm 5.2 GHz: 22 dBm
Maximum available transmit power per AP	6 dBm to 24 dBm
Transmit power adjustment	1 dB increments Actual Tx power dependent on national regulatory limits
Antenna configuration	2×2 MIMO (transmit and receive on two antennas)
Regulatory Information	
Safety specifications	UL EU EN 60950-1 2nd Ed., ANZ C-Tick, UL 2043; EU RoHS Directive 2002/95/EC; CE, IC, FCC
EMC specifications	FCC 15.247, 15.407/EN300 328, EN 301 893; FCC Part 15 Subpart B, EN 55022: 2006 + A1: 2007, ICES – 003 (Class B) EN 55024: 1998 + A1: 2001 + A2: 2003
Radio approvals	FCC 15.247, 15.407/EN 300 328, EN 301 893; UL EU ENH 60950-1 second edition, ANZ C-tick, UL 2043; FCC Part 15 Subpart B, EN 55022: 2006 + A1: 2007, ICES-003 (Class B) EN 55024: 1998 + A1:2001 + A2:2003; EU RoHS Directive 2002/95/EC; CE, IC, FCC

Corporate Headquarters
San Jose, CA USA
T: +1-408-333-8000
info@brocade.com

European Headquarters
Geneva, Switzerland
T: +41-22-799-56-40
emea-info@brocade.com

Asia Pacific Headquarters
Singapore
T: +65-6538-4700
apac-info@brocade.com

© 2013 Brocade Communications Systems, Inc. All Rights Reserved. 05/13 GA-DS-1623-02

ADX, AnyIO, Brocade, Brocade Assurance, the B-wing symbol, DCX, Fabric OS, ICX, MLX, MyBrocade, OpenScript, VCS, VDX, and Vyatta are registered trademarks, and HyperEdge, The Effortless Network, and The On-Demand Data Center are trademarks of Brocade Communications Systems, Inc., in the United States and/or in other countries. Other brands, products, or service names mentioned may be trademarks of their respective owners.

Notice: This document is for informational purposes only and does not set forth any warranty, expressed or implied, concerning any equipment, equipment feature, or service offered or to be offered by Brocade. Brocade reserves the right to make changes to this document at any time, without notice, and assumes no responsibility for its use. This informational document describes features that may not be currently available. Contact a Brocade sales office for information on feature and product availability. Export of technical data contained in this document may require an export license from the United States government.

BROCADE