BROCADE MOBILE BACKHAUL SOLUTIONS

SCALABLE SOLUTIONS

Scalable Solutions for Mobile Backhaul Networks

HIGHLIGHTS

- End users are accessing media-rich applications from their mobile devices, and they require high-speed bandwidth from wherever they are in the network
- Service providers are migrating legacy backhaul networks to Carrier Ethernet for increased performance and scalability
- Brocade offers next-generation Carrier Ethernet Mobile Backhaul solutions for end-user connectivity, reliability, and increased scalability

OVERVIIEW

With the growth in mobile broadband users, service providers recognize that future revenue is dependent on their ability to deliver a wider range of mobile broadband applications—like streaming and real-time multimedia. All of these applications require higher bandwidth and lower latency to ensure service quality. The delivery of these applications has strained current 3G wireless networks and associated backhaul networks that are based on legacy technologies. Service providers are challenged to evolve mobile transport networks to accommodate these new packet-based services.

As a result, many service providers are migrating to 4G (Long Term Evolution [LTE]) and backhaul, based on Carrier Ethernet technologies, to enable scalable bandwidth at a lower cost as well as provide service assurance across all services.

SOLUTION

The Brocade® Mobile Backhaul Services Solution is designed to help service providers migrate their legacy networks and make a profitable transition to a more cost-effective mobile transport infrastructure. The solution is comprised of next generation Carrier Ethernet and Internet Protocol/Multi-Protocol Label Switching (IP/MPLS)-based services portfolio, and a comprehensive management solution for end-to-end management. Service providers will be able to support the delivery of new multimedia services and applications with advanced Quality of Service (QoS) for reliable and cost-effective service delivery.

TARGETED SOLUTION FOR MOBILE NETWORKS

The Brocade Mobile Backhaul Services Solution is optimally designed to meet the stringent requirements that are often needed at service provider cell sites. With

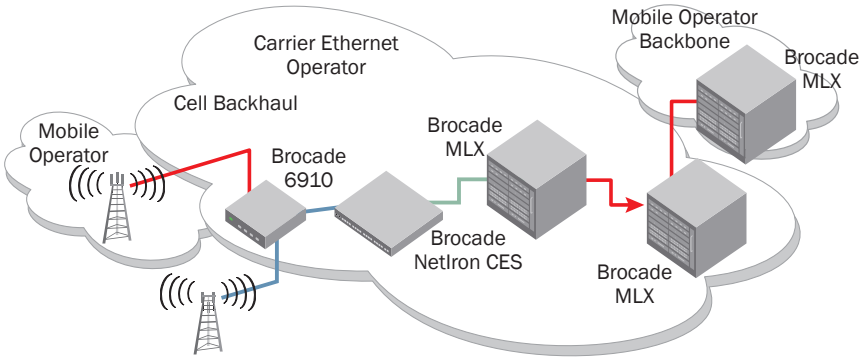

Figure 1.
The Brocade 6910 Ethernet Access Switch is deployed as a cell site switch to provide cell site connectivity from the mobile operator to the Carrier Ethernet service provider.

BROCADE

its compact form factor and its support for extreme temperature conditions, the Brocade 6910 Ethernet Access Switch can be deployed directly at the cell site. As a result, mobile providers are able to efficiently download high-capacity traffic directly to the cell site switch, eliminating the expensive leased line cost and the backhaul distance between operator handoffs. In addition, the Brocade 6910 provides connectivity via the Brocade MLXe Core Router to the LTE network for Carrier Ethernet and MPLS transport. This cost-effective solution provides compelling economics that are driven by the lowest Total Cost of Ownership (TCO). (For documentation, see the White Paper titled, "The Business Case for the Brocade Carrier Ethernet IP Solution in a Metro Network.")

SLA Assurance

The Brocade service provider portfolio offers a full range of Layer 2 protocols to deliver the QoS needed for Service Level Agreement (SLA) validation. This includes Operations and Maintenance (OAM) and advanced QoS. OAM is a critical function used to monitor the health of the network and diagnose problems, in order to avoid costly truck rolls. Brocade supports the Ethernet OAM industry standard for link monitoring, auto-discovery, heartbeat, and fault notification messages. Brocade also supports IEEE 802.1ag and ITU-T Y.1731, which provide mechanisms for Connectivity Fault Management (CFM) and Performance Management (PM) over any path, giving the service provider the ability to manage each individual customer circuit for SLA contracts. It also provides connectivity verification that the customer's service is up and running.

In addition, the Brocade Mobile Backhaul Services Solution provides advanced QoS features, including three color traffic policers and priority re-marking that meets business Virtual Private Network (VPN) SLAs. The Brocade Mobile Backhaul Services Solution enables service providers to offer high-value services for better customer satisfaction and retention. With advanced QoS capabilities. Coupled with policy management and IP service routing, service providers can improve the quality of the customer experience. This results in improved mobile internet access, better location and presence, and the ability for users to connect multiple devices with improved performance and scale.

Resiliency and Protection

The Brocade Mobile Backhaul Services Solution provides resiliency and protection from the cell site to the core with Carrier Ethernet and MPLS industry standard protocols. These standardized features—including Ethernet Ring Protection, VLANs, Layer 2 Virtual Private LANs (VLANs), link aggregation, IGMP (Internet Group Management Protocol) snooping, and multicast VLAN registration—ensure end-to-end network compatibility across a Carrier Ethernet network, eliminating vendor locks across the network. The support of these standard protocols and protection schemes simplify operations for service providers and ease the service creation and capacity adjustments that they may need to make.

WHY BROCADE?

Brocade provides innovative, end-to-end network solutions that help the world's leading organizations transition smoothly to a virtualized world where applications and information can reside anywhere. These solutions deliver the unique capabilities for a more flexible network infrastructure with unmatched simplicity, non-stop networking, optimized applications, and investment protection. As a result, organizations in a wide range of industries can achieve their most critical business objectives with greater simplicity and a faster return on investment. Brocade products are proven in thousands of IP/MPLS deployments where service providers have deployed Brocade network solutions—providing the reliability, scalability, and performance that is critical for service differentiation and greater profitability.

For more information about Brocade IP products, visit www.brocade.com.

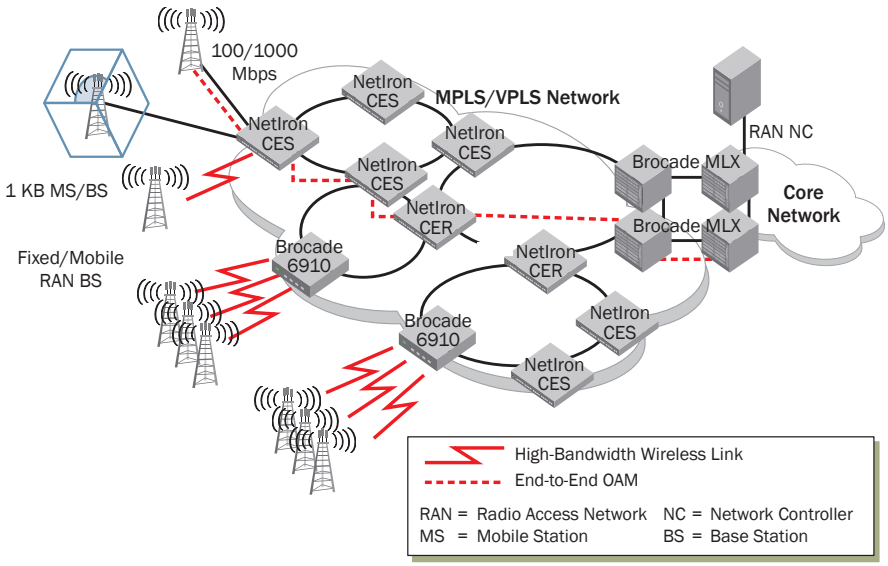

Figure 2.
The Brocade 6910 Access Switch—via connectivity to the Brocade NetIron® CER 2000 Series and Brocade MLXe Core Router—provides cell backhaul to the LTE network.

Corporate Headquarters
San Jose, CA USA
T: +1-408-333-8000
info@brocade.com

European Headquarters
Geneva, Switzerland
T: +41-22-799-56-40
emea-info@brocade.com

Asia Pacific Headquarters
Singapore
T: +65-6538-4700
apac-info@brocade.com

© 2011 Brocade Communications Systems, Inc. All Rights Reserved. 11/11 GA-AG-415-00

Brocade, the B-wing symbol, DCX, Fabric OS, and SAN Health are registered trademarks, and Brocade Assurance, Brocade NET Health, Brocade One, CloudPlex, MLX, VCS, VDX, and When the Mission Is Critical, the Network Is Brocade are trademarks of Brocade Communications Systems, Inc., in the United States and/or in other countries. Other brands, products, or service names mentioned are or may be trademarks or service marks of their respective owners.

Notice: This document is for informational purposes only and does not set forth any warranty, expressed or implied, concerning any equipment, equipment feature, or service offered or to be offered by Brocade. Brocade reserves the right to make changes to this document at any time, without notice, and assumes no responsibility for its use. This informational document describes features that may not be currently available. Contact a Brocade sales office for information on feature and product availability. Export of technical data contained in this document may require an export license from the United States government.

BROCADE